DATA MODUL

SPECIFICATION

G084SN05 V9

8.4" - SVGA - LVDS

Version: 4.2
Date: 28.07.2016

Note: This specification is subject to change without prior notice

www.data-modul.com

☐ **Preliminary Specifications**
■ **Final Specifications**

Module	8.4 Inch Color TFT-LCD
Model Name	G084SN05 V9

Customer	**Date**	**Approved by**	**Date**
		Grace Hung	2015/8/21
Checked & Approved by		**Prepared by**	
		Ryan Chen	2015/8/21
Note: This Specification is subject to change without notice.		General Display Business Division / AU Optronics corporation	

AUO Confidential For DATAMODUL Internal Use Only On 2017/03/23

For DATAMODUL Internal Use Only - Provided By pavelkonvalinka On 2017/03/23

Contents

1. Operating Precautions 4

2. General Description 5

2.1 Display Characteristics 5

2.2 Optical Characteristics 6

3. Functional Block Diagram 9

4. Absolute Maximum Ratings 10

4.1 Absolute Ratings of TFT LCD Module 10

4.2 Absolute Ratings of Environment 10

5. Electrical Characteristics 11

5.1 TFT LCD Module 11

5.2 Backlight Unit 13

6. Signal Characteristic 14

6.1 Pixel Format Image 14

6.2 Signal Description 15

6.3 Scanning Direction 16

6.4 The Input Data Format 18

6.5 Interface Timing 19

6.6 Power ON/OFF Sequence 20

7. Connector & Pin Assignment 21

7.1 TFT LCD Signal (CN1): LVDS Connector 21

7.2 LED Backlight Unit (CN2): LED Driver Connector 21

7.3 LED Light Bar Input Connector (CN3): 22

8. Reliability Test Criteria 22

9. Mechanical Characteristics 23

9.1 LCM Front View 23

9.2 LCM Rear View 24

10. Label and Packaging 25

10.1 Shipping Label (on the rear side of TFT-LCD display) 25

10.2 Carton Package 25

11 Safety 26

11.1 Sharp Edge Requirements 26

11.2 Materials 26

11.3 Capacitors 26

11.4 National Test Lab Requirement 26

AUO Confidential For DATAMODUL Internal Use Only On 2017/03/23

For DATAMODUL Internal Use Only - Provided By pavelkonvalinka On 2017/03/23

Record of Revision

Version and Date	Page	Old description	New Description
0.0 2011/04/07		First Edition	
0.1 2011.08/01	5		Update Input Voltage, Power Consumption, Weight
	6		Update Response Time
	11		Update Power Specification
	13		Update Parameter guideline for LED backlight
	20, 21		Update LED Connector, Cable Color
1.0 2011/12/28	6	White Luminance condition @ I_F= 80mA	White Luminance condition @ I_F= 50mA
	6	TBD	Update Optical Characteristics spec.
	13	TBD	Update Parameter guideline for LED backlight
	22, 23	LCM Front, Rear View	Update LCM Front, Rear View
2.0 2013/5/3	6,15		Color spec, Signal Description (UD / LR)
3.0 2014/3/18	5	2.1 Display Characteristics Physical Size: 203.0(W)x142.5(H)x8.0(D) (typ.)	2.1 Display Characteristics Physical Size: 203.0(W)x142.5(H)x8.0(D)
3.0 2014/3/18	22	9.1 LCM Front View Thickness 8mm+/-0.3mm	9.1 LCM Front View Thickness 8mm (max.)
3.0 2014/3/18	23	9.2 LCM Rear View	9.2 LCM Rear View
4.0 2014/5/27	15, 16	6.2 Signal Description: Pin19 / 20	6.2 Signal Description: modify Pin19 / 20 description and add note 3 figure
4.1 2015/8/21	16		Modify note3 figure
4.2 2016/7/28	25		Modify 10.1 Shipping Label figure

AUO Confidential For DATAMODUL Internal Use Only On 2017/03/23

For DATAMODUL Internal Use Only - Provided By pavelkonvalinka On 2017/03/23

1. Operating Precautions

1) Since front polarizer is easily damaged, please be cautious not to scratch it.
2) Be sure to turn off power supply when inserting or disconnecting from input connector.
3) Wipe off water drop immediately. Long contact with water may cause discoloration or spots.
4) When the panel surface is soiled, wipe it with absorbent cotton or soft cloth.
5) Since the panel is made of glass, it may be broken or cracked if dropped or bumped on hard surface.
6) To avoid ESD (Electro Static Discharde) damage, be sure to ground yourself before handling TFT-LCD Module.
7) Do not open nor modify the module assembly.
8) Do not press the reflector sheet at the back of the module to any direction.
9) In case if a module has to be put back into the packing container slot after it was taken out from the container, do not press the center of the LED Reflector edge. Instead, press at the far ends of the LED Reflector edge softly. Otherwise the TFT Module may be damaged.
10) At the insertion or removal of the Signal Interface Connector, be sure not to rotate nor tilt the Interface Connector of the TFT Module.
11) After installation of the TFT Module into an enclosure (Notebook PC Bezel, for example), do not twist nor bend the TFT Module even momentary. At designing the enclosure, it should be taken into consideration that no bending/twisting forces are applied to the TFT Module from outside. Otherwise the TFT Module may be damaged.
12) Small amount of materials having no flammability grade is used in the LCD module. The LCD module should be supplied by power complied with requirements of Limited Power Source (IEC60950 or UL1950), or be applied exemption.
13) Severe temperature condition may result in different luminance, response time.
14) Continuous operating TFT-LCD Module under high temperature environment may accelerate LED light bar exhaustion and reduce luminance dramatically.
15) The data on this specification sheet is applicable when LCD module is placed in landscape position.
16) Continuous displaying fixed pattern may induce image sticking. It is recommended to use screen saver or shuffle content periodically if fixed pattern is displayed on the screen.

AUO Confidential For DATAMODUL Internal Use Only On 2017/03/23

For DATAMODUL Internal Use Only - Provided By pavelkonvalinka On 2017/03/23

2. General Description

This specification applies to the 8.4 inch color TFT LCD module G084SN05 V9.

G084SN05 V9 designed with wide viewing angle; wide operating temperature and long life LEDs backlight is well suited to be the display units for Industrial Applications.

LED driving board for backlight unit is included in this panel and the structure of the LED units is replaceable.

G084SN05 V9 is built in timing controller and LVDS interface.

The screen format is intended to support the SVGA (800(H) x 600(V)) screen and 16.2M (RGB 8-bits) or 262k colors (RGB 6-bits).

G084SN05 V9 is a RoHS product.

2.1 Display Characteristics

The following items are characteristics summary on the table under 25°C condition:

Items	Unit	Specifications
Screen Diagonal	[inch]	8.4 (213.4mm)
Active Area	[mm]	170.4(H) x 127.8(V)
Pixels H x V		800x3(RGB) x 600
Pixel Pitch	[mm]	0.213x 0.213
Pixel Arrangement		R.G.B. Vertical Stripe
Display Mode		TN, Normally White
Nominal Input Voltage VDD	[Volt]	3.3 (typ)
Typical Power Consumption	[Watt]	2.94 (typ)
Weight	[Grams]	250 (typ)
Physical Size	[mm]	203.0(W) x 142.5(H) x 8.0(D)
Electrical Interface		1 channel LVDS
Surface Treatment		Anti-glare, Hardness 3H
Support Color		262K(6-bit) / 16.2M(8-bit)
Temperature Range Operating Storage (Non-Operating)	 [°C] [°C]	 -30 to +85 (panel surface temperature) -30 to +85
RoHS Compliance		RoHS Compliance

AUO Confidential For DATAMODUL Internal Use Only On 2017/03/23

For DATAMODUL Internal Use Only - Provided By pavelkonvalinka On 2017/03/23

2.2 Optical Characteristics

The optical characteristics are measured under stable conditions at 25° C (Room Temperature):

Item	Unit	Conditions	Min.	Typ.	Max.	Note
White Luminance	[cd/m2]	I_F= 50mA (center point)	350	450	-	1
Uniformity	%	9 Points	70	75	-	1, 2, 3
Contrast Ratio			400	600	-	4
Response Time	[msec]	Rising	-	20	30	5
	[msec]	Falling	-	10	20	
	[msec]	Raising + Falling	-	30	50	
Viewing Angle	[degree] [degree]	Horizontal (Right) CR ≧ 10 (Left)	70 70	80 80	- -	6
	[degree] [degree]	Vertical (Upper) CR ≧ 10 (Lower)	65 50	80 60	- -	
Color / Chromaticity Coordinates (CIE 1931)		Red x	0.509	0.609	0.709	1
		Red y	0.233	0.333	0.433	
		Green x	0.265	0.365	0.465	
		Green y	0.47	0.57	0.67	
		Blue x	0.051	0.151	0.251	
		Blue y	0.006	0.106	0.206	
		White x	0.21	0.31	0.41	
		White y	0.23	0.33	0.43	
Color Gamut	%			45	-	1

Note 1: Measurement method

Equipment : Pattern Generator, Power Supply, Digital Voltmeter, Luminance meter (SR_3 or equivalent)

Aperture 1° with 50cm viewing distance

Test Point Center

Environment *< 1 lux*

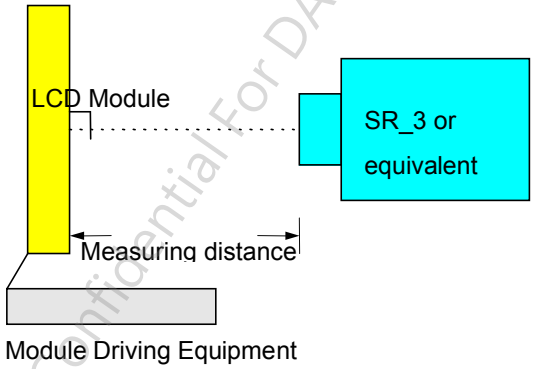

AUO Confidential For DATAMODUL Internal Use Only On 2017/03/23

For DATAMODUL Internal Use Only - Provided By pavelkonvalinka On 2017/03/23

Note 2: Definition of 9 points position (Display active area : 170.4(H) x 127.8(V))

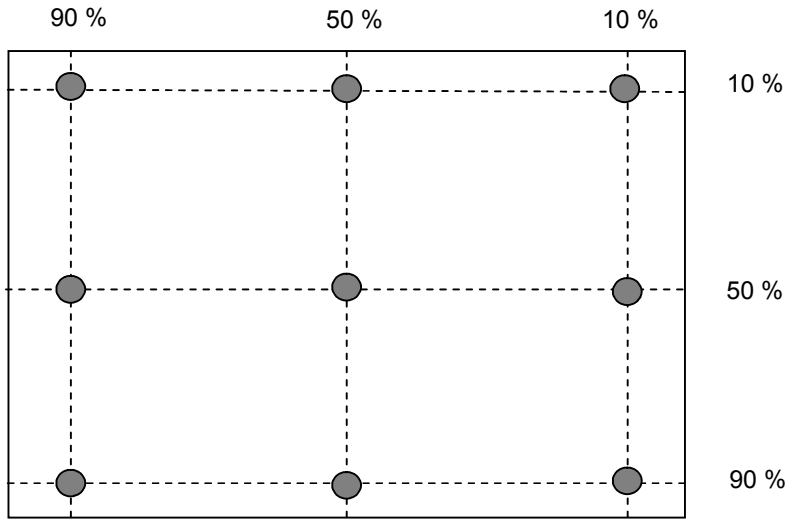

Note 3: The luminance uniformity of 9 points is defined by dividing the minimum luminance value by the maximum test point luminance

$$\delta_{W9} = \frac{\text{Minimum Brightness of nine points}}{\text{Maximum Brightness of nine points}}$$

Note 4： Definition of contrast ratio (CR):

$$\text{Contrast ratio (CR)} = \frac{\text{Brightness on the “White” state}}{\text{Brightness on the “Black” state}}$$

Note 5: Definition of response time:

The output signals of photo detector are measured when the input signals are changed from “White” to “Black” (falling time) and from “Black” to “White” (rising time), respectively. The response time interval is between 10% and 90% of amplitudes. Please refer to the figure as below.

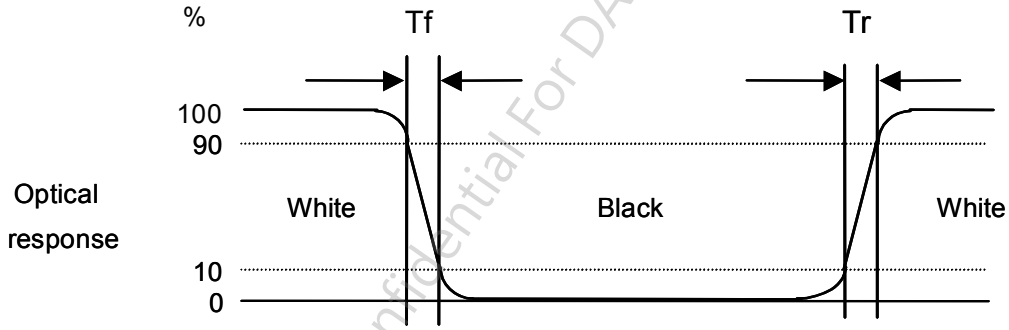

AUO Confidential For DATAMODUL Internal Use Only On 2017/03/23

For DATAMODUL Internal Use Only - Provided By pavelkonvalinka On 2017/03/23

Note 6: Definition of viewing angle

Viewing angle is the measurement of contrast ratio ≧10, at the screen center, over a 180° horizontal and 180° vertical range (off-normal viewing angles). The 180° viewing angle range is broken down as below: 90° (θ) horizontal left and right, and 90° (Φ) vertical high (up) and low (down). The measurement direction is typically perpendicular to the display surface with the screen rotated to its center to develop the desired measurement viewing angle.

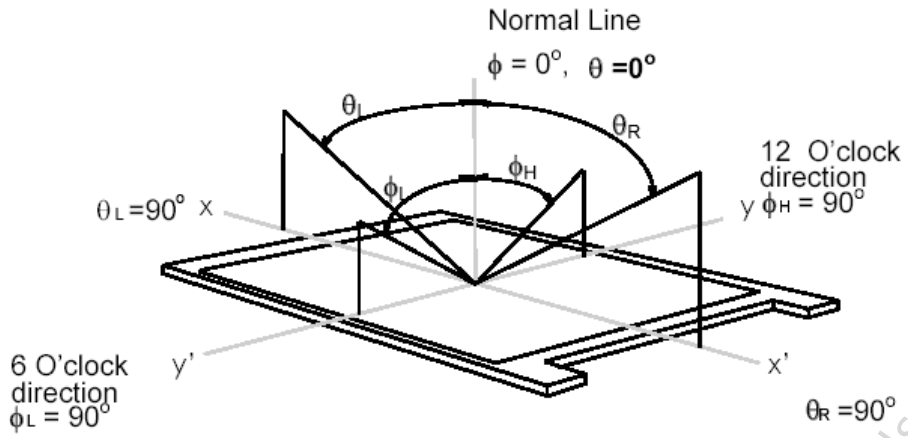

AUO Confidential For DATAMODUL Internal Use Only On 2017/03/23

For DATAMODUL Internal Use Only - Provided By pavelkonvalinka On 2017/03/23

3. Functional Block Diagram

The following diagram shows the functional block of the 8.4 inch color TFT/LCD module:

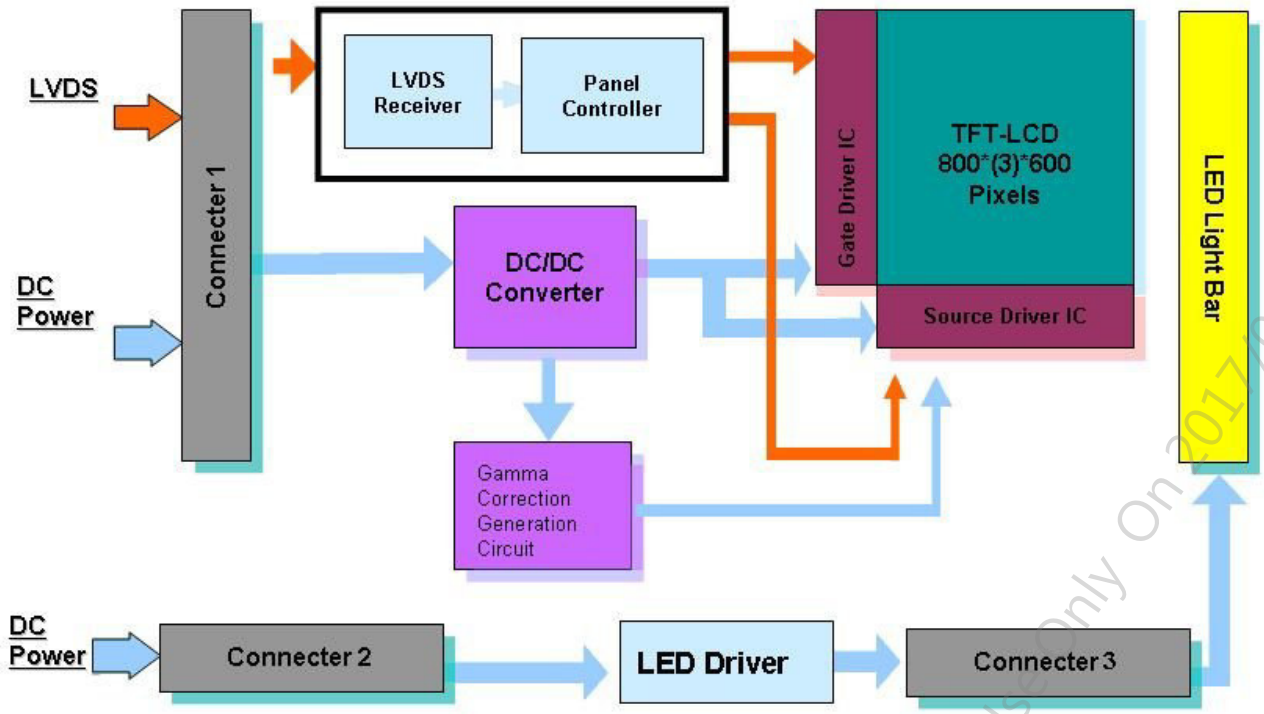

AUO Confidential For DATAMODUL Internal Use Only On 2017/03/23

For DATAMODUL Internal Use Only - Provided By pavelkonvalinka On 2017/03/23

4. Absolute Maximum Ratings

4.1 Absolute Ratings of TFT LCD Module

Item	Symbol	Min	Max	Unit	Conditions
Logic/LCD Drive Voltage	VDD	-0.3	+3.6	[Volt]	

4.2 Absolute Ratings of Environment

Item	Symbol	Min	Max	Unit
Operating Temperature	TOP	-30	+85	[°C]
Operation Humidity	HOP	5	90	[%RH]
Storage Temperature	TST	-30	+85	[°C]
Storage Humidity	HST	5	90	[%RH]

Note: Maximum Wet-Bulb should be 390C and no condensation.

AUO Confidential For DATAMODUL Internal Use Only On 2017/03/23

For DATAMODUL Internal Use Only - Provided By pavelkonvalinka On 2017/03/23

5. Electrical Characteristics

5.1 TFT LCD Module

5.1.1 Power Specification

Symbol	Parameter	Min	Typ	Max	Units	Remark
VDD	Logic/LCD Drive Voltage	3.0	3.3	3.6	[Volt]	±10%
I_{VDD}	VDD Current	-	270	330	[mA]	64 Gray Bar Pattern (VDD=3.3V, at 60Hz)
P_{VDD}	VDD Power	-	0.9	1.2	[Watt]	64 Gray Bar Pattern (VDD=3.3V, at 60Hz)

Note 1: Measurement condition:

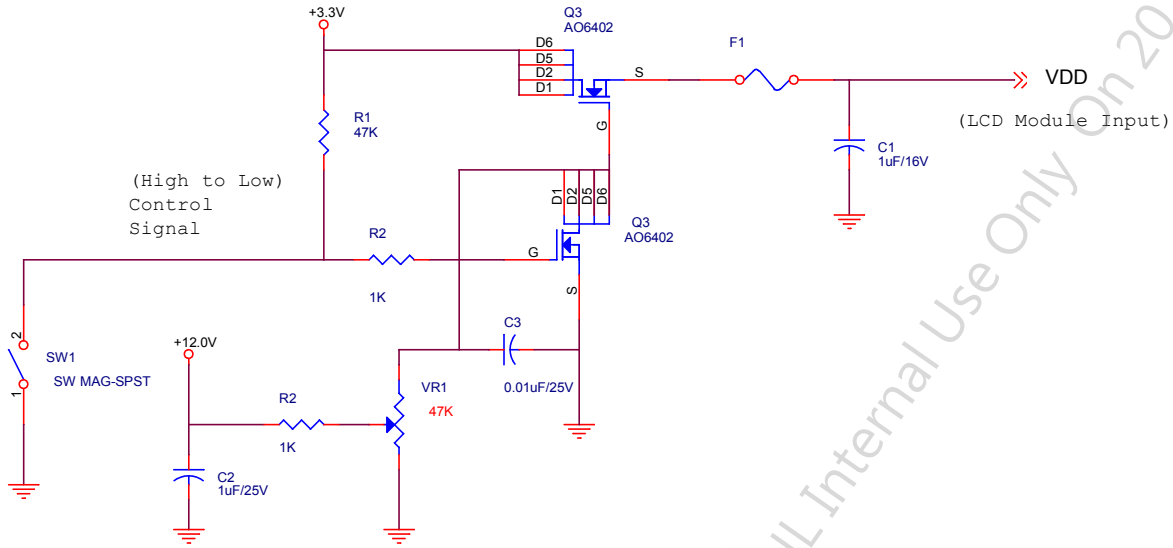

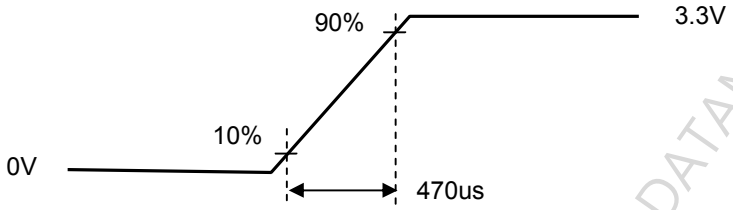

VDD rising time

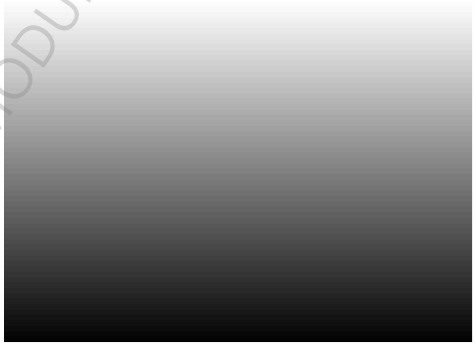

64 Gray pattern

AUO Confidential For DATAMODUL Internal Use Only On 2017/03/23

For DATAMODUL Internal Use Only - Provided By pavelkonvalinka On 2017/03/23

5.1.2 Signal Electrical Characteristics

Input signals shall be low or Hi-Z state when VDD is off.

Symbol	Item	Min.	Typ.	Max.	Unit	Remark
VTH	Differential Input High Threshold	-	-	100	[mV]	VICM=1.2V
VTL	Differential Input Low Threshold	-100	-	-	[mV]	VICM=1.2V
| VID |	Input Differential Voltage	100	400	600	[mV]	
VICM	Differential Input Common Mode Voltage	1.1		1.6	[V]	VTH/VTL=±100mV

Note: LVDS Signal Waveform.

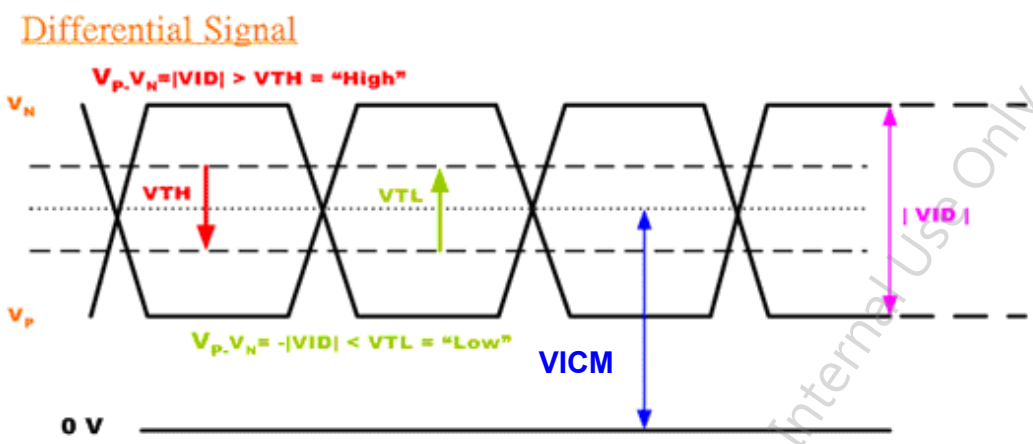

AUO Confidential For DATAMODUL Internal Use Only On 2017/03/23

For DATAMODUL Internal Use Only - Provided By pavelkonvalinka On 2017/03/23

5.2 Backlight Unit

5.2.1 Parameter guideline for LED backlight

Following characteristics are measured under a stable condition using an inverter at 250C (Room Temperature):

Symbol	Parameter	Min.	Typ.	Max.	Unit	Remark
VCC	Input Voltage	10.8	12	12.6	[Volt]	
I_{VCC}	Input Current	-	0.17	-	[A]	100% PWM Duty
P_{VCC}	Power Consumption	-	2.04	2.14	[Watt]	100% PWM Duty
F_{PWM}	Dimming Frequency	200	-	20K	[Hz]	
	Swing Voltage	3	3.3	5.5	V	
	Dimming Duty Cycle	5	-	100	%	
I_F	LED Forward Current	-	50	52.5	mA	Ta = 25°C
V_F	LED Forward Voltage	-	21		Volt	I_F = 50mA, Ta = -30°C
			19.2	21.9	Volt	I_F = 50mA, Ta = 25°C
			18.3			I_F = 50mA, Ta = 85°C
P_{LED}	LED Power Consumption	-	1.92	-	Watt	I_F = 50mA, Ta = 25°C (total power)
Operation Lifetime		50,000			Hrs	I_F = 50mA, Ta = 25°C

Note 1: Ta means ambient temperature of TFT-LCD module.

Note 2: VCC, Ivcc, P_{VCC} , are defined for LED B/L.(100% duty of PWM dimming)

Note 3: I_F, V_F are defined for each channel of LED Light Bar. There are two LED channels (AN1-CA1-CA2) in back light unit.

Note 4: If G084SN05 V9 module is driven by high current or at high ambient temperature & humidity condition. The operating life will be reduced.

Note 5: Operating life means brightness goes down to 50% initial brightness. Minimum operating life time is estimated data.

AUO Confidential For DATAMODUL Internal Use Only On 2017/03/23

For DATAMODUL Internal Use Only - Provided By pavelkonvalinka On 2017/03/23

6. Signal Characteristic

6.1 Pixel Format Image

Following figure shows the relationship between input signal and LCD pixel format.

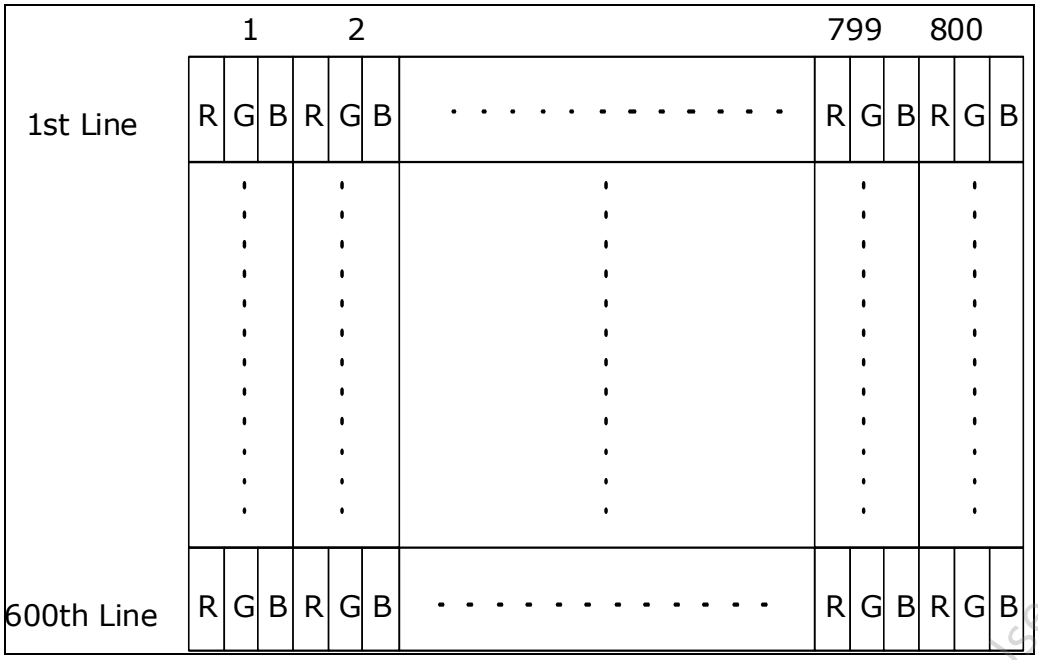

AUO Confidential For DATAMODUL Internal Use Only On 2017/03/23

For DATAMODUL Internal Use Only - Provided By pavelkonvalinka On 2017/03/23

6.2 Signal Description

LVDS is a differential signal technology for LCD interface and high speed data transfer device. The connector pin definition is as below.

Pin No.	Symbol	Description
1	VDD	Power Supply, 3.3V (typical)
2	VDD	Power Supply, 3.3V (typical)
3	UD	Vertical Reverse Scan Control, When UD=Low or NC → Normal Mode. When UD=High → Vertical Reverse Scan. Note 1,2
4	LR	Horizontal Reverse Scan Control, When LR=Low or NC → Normal Mode. When LR=High → Horizontal Reverse Scan. Note 1,2
5	RxIN1-	LVDS differential data input Pair 0
6	RxIN1+	
7	GND	Ground
8	RxIN2-	LVDS differential data input Pair 1
9	RxIN2+	
10	GND	Ground
11	RxIN3-	LVDS differential data input Pair 2
12	RxIN3+	
13	GND	Ground
14	RxCLKIN-	LVDS differential Clock input Pair
15	RxCLKIN+	
16	GND	Ground
17	SEL 68	LVDS 6/8 bit select function control, Low or NC → 6 Bit Input Mode. High → 8 Bit Input Mode. Note
18	NC	NC
19	RxIN4-	LVDS differential data input Pair 3.
20	RxIN4+	Pin19:VDD & Pin20:GND for 6 Bit Input Mode NOTE 3

Note 1 : “Low” stands for 0V. “High” stands for 3.3V. “NC” stands for “No Connected.”

Note2 : For reverse scan mode, please connect to 3.3V directly. A pull-up resistor on the input side will cause abnormal reverse scan.

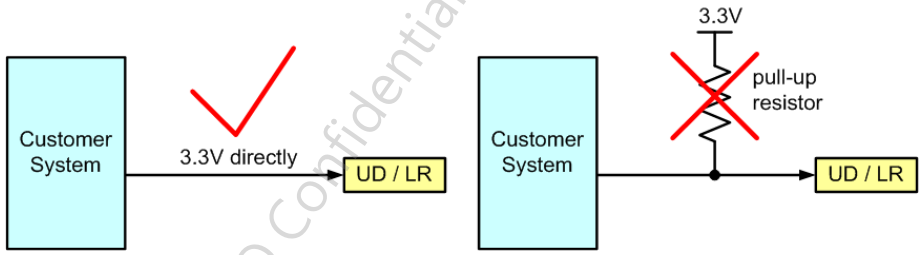

AUO Confidential For DATAMODUL Internal Use Only On 2017/03/23

For DATAMODUL Internal Use Only - Provided By pavelkonvalinka On 2017/03/23

Note3 :

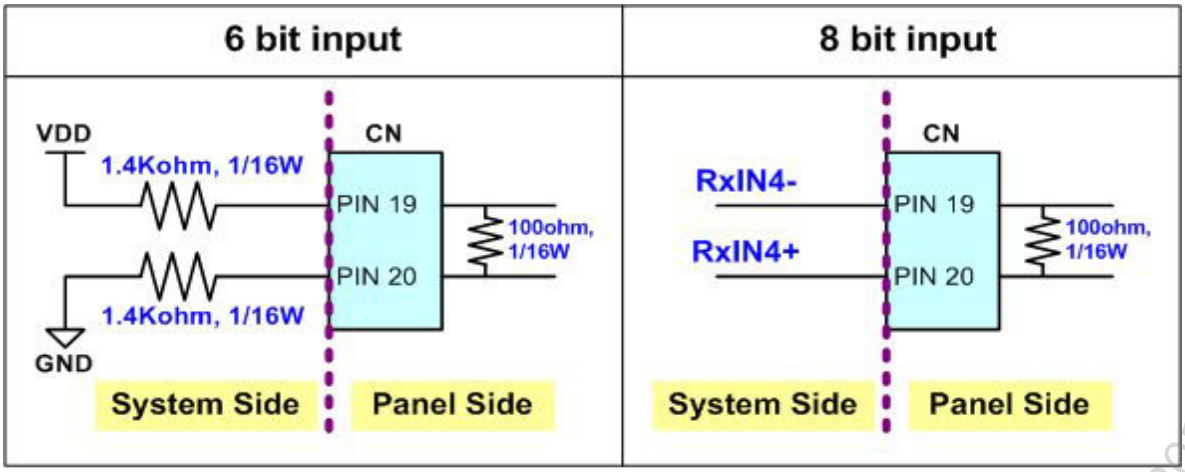

AUO Confidential For DATAMODUL Internal Use Only On 2017/03/23

For DATAMODUL Internal Use Only - Provided By pavelkonvalinka On 2017/03/23

6.3 Scanning Direction

The following figures show the image seen from the front view. The arrow indicates the direction of scan.

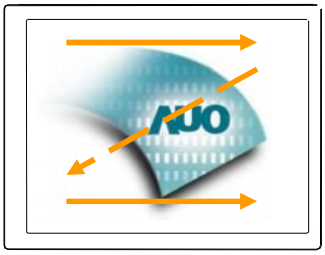

Fig. 1

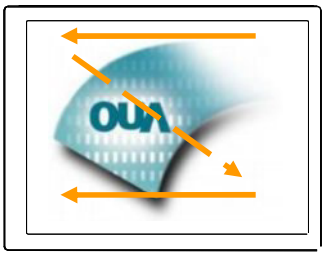

Fig. 2

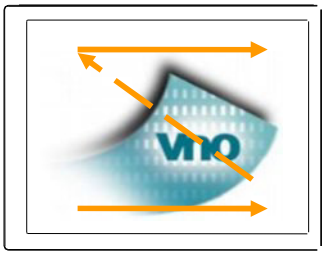

Fig. 3

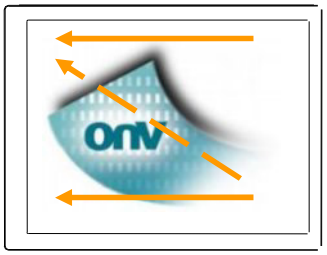

Fig. 4

Fig. 1 Normal scan (Pin3, UD = Low or NC ; Pin4, RL = Low or NC)

Fig. 2 Reverse scan (Pin3, UD = Low or NC ; Pin4, RL = High)

Fig. 3 Reverse scan (Pin3, UD = High ; Pin4, RL = Low or NC)

Fig. 4 Reverse scan (Pin3, UD = High ; Pin4, RL = High)

AUO Confidential For DATAMODUL Internal Use Only On 2017/03/23

For DATAMODUL Internal Use Only - Provided By pavelkonvalinka On 2017/03/23

6.4 The Input Data Format

6.4.1 SEL68

SEL68 = ”Low” or “NC” for 6 bits LVDS Input

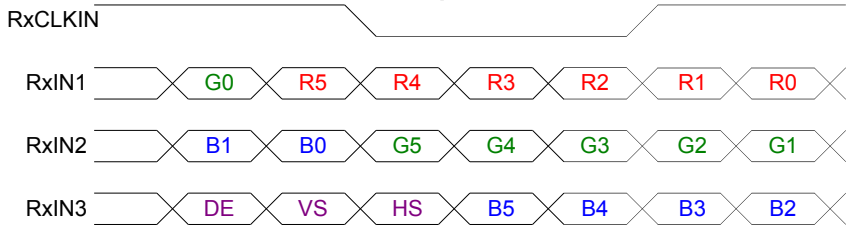

SEL68 = “High” for 8 bits LVDS Input

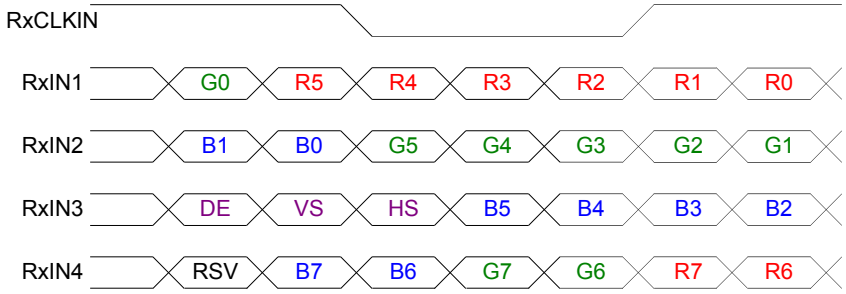

Note1: Please follow PSWG.
Note2: R/G/B data 7:MSB, R/G/B data 0:LSB

Signal Name	Description	Remark
R7 R6 R5 R4 R3 R2 R1 R0	Red Data 7 (MSB) Red Data 6 Red Data 5 Red Data 4 Red Data 3 Red Data 2 Red Data 1 Red Data 0 (LSB)	Red-pixel Data Each red pixel’s brightness data consists of these 8 bits pixel data.
G7 G6 G5 G4 G3 G2 G1 G0	Green Data 7 (MSB) GreenData 6 GreenData 5 GreenData 4 GreenData 3 GreenData 2 GreenData 1 GreenData 0 (LSB)	Green-pixel Data Each green pixel’s brightness data consists of these 8 bits pixel data.
B7 B6 B5 B4 B3 B2 B1 B0	Blue Data 7 (MSB) Blue Data 6 Blue Data 5 Blue Data 4 Blue Data 3 Blue Data 2 Blue Data 1 Blue Data 0 (LSB)	Blue-pixel Data Each blue pixel’s brightness data consists of these 8 bits pixel data.
RxCLKIN+ RxCLKIN-	LVDS Clock Input	
DE	Display Enable	
VS	Vertical Sync	
HS	Horizontal Sync	

Note: Output signals from any system shall be low or Hi-Z state when VDD is off.

AUO Confidential For DATAMODUL Internal Use Only On 2017/03/23

For DATAMODUL Internal Use Only - Provided By pavelkonvalinka On 2017/03/23

6.5 Interface Timing

6.5.1 Timing Characteristics

DE mode only

Parameter		Symbol	Min.	Typ.	Max.	Unit	Condition
Clock frequency		1/ T_{Clock}	33.6	39.8	48.3	MHz	
Vertical Section	Period	T_V	608	628	650	T_H	
	Active	T_{VD}	600	600	600		
	Blanking	T_{VB}	8	28	50		
Horizontal Section	Period	T_H	920	1056	1240	T_{Clock}	
	Active	T_{HD}	800	800	800		
	Blanking	T_{HB}	120	256	440		

Note: Frame rate is 60 Hz.
Note: DE mode.

6.5.2 Input Timing Diagram

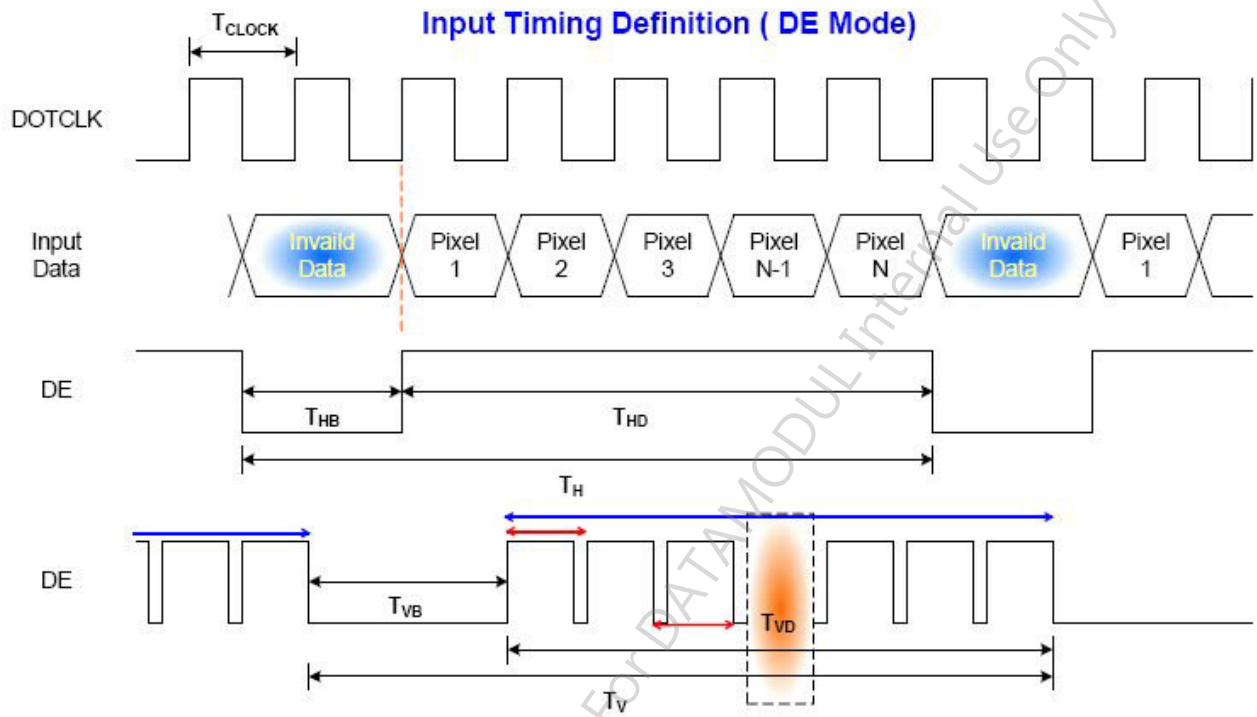

AUO Confidential For DATAMODUL Internal Use Only On 2017/03/23

For DATAMODUL Internal Use Only - Provided By pavelkonvalinka On 2017/03/23

6.6 Power ON/OFF Sequence

VDD power and BackLight on/off sequence is as below. Interface signals are also shown in the chart. Signals from any system shall be Hi-Z state or low level when VDD is off.

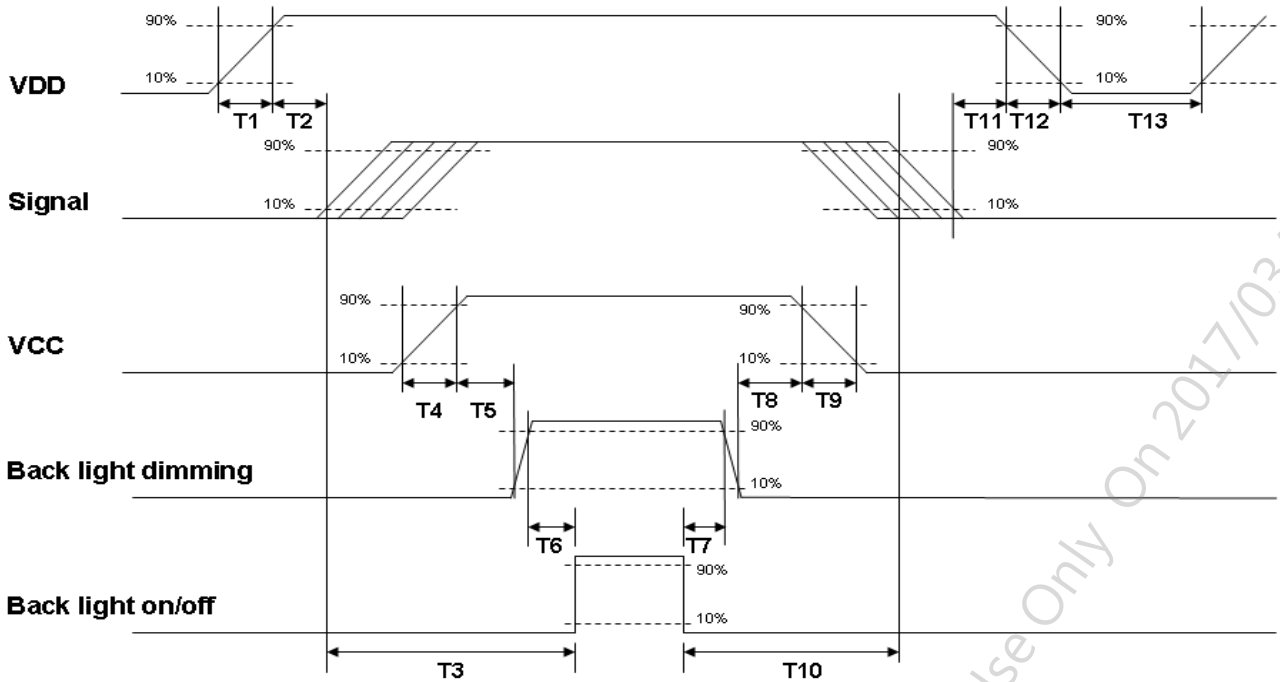

Power ON/OFF sequence timing

Parameter	Value			Units
	Min.	Typ.	Max.	
T1	0.5	--	10	[ms]
T2	30	40	50	[ms]
T3	200	--	--	[ms]
T4	0.5	--	10	[ms]
T5	10	--	--	[ms]
T6	10	--	--	[ms]
T7	0	--	--	[ms]
T8	10	--	--	[ms]
T9	--	--	10	[ms]
T10	110	--	--	[ms]
T11	0	16	50	[ms]
T12	--	--	10	[ms]
T13	1000	--	--	[ms]

The above on/off sequence should be applied to avoid abnormal function in the display. Please make sure to turn off the power when you plug the cable into the input connector or pull the cable out of the connector.

AUO Confidential For DATAMODUL Internal Use Only On 2017/03/23

For DATAMODUL Internal Use Only - Provided By pavelkonvalinka On 2017/03/23

7. Connector & Pin Assignment

Physical interface is described as for the connector on module. These connectors are capable of accommodating the following signals and will be following components.

7.1 TFT LCD Signal (CN1): LVDS Connector

Connector Name / Designation	Signal Connector
Manufacturer	STM, Hirose or compatible
Connector Model Number	STM -MSB24013P20HA, Hirose- DF19LA-20P-1H or compatible
Mating Model Number	STM-P24013P20, Hirose-DF19-20S-1C or compatible

Pin No.	Signal Name	Pin No.	Signal Name
1	VDD	2	VDD
3	UD	4	LR
5	RxIN1-	6	RxIN1+
7	GND	8	RxIN2-
9	RxIN2+	10	GND
11	RxIN3-	12	RxIN3+
13	GND	14	RxCKIN-
15	RxCKIN+	16	GND
17	SEL 68	18	NC
19	RxIN4-	20	RxIN4+

7.2 LED Backlight Unit (CN2): LED Driver Connector

Connector Name / Designation	LED Connector
Manufacturer	ENTERY
Connector Model Number	ENTERY 3808K-F04N-02R or compatible
Mating Model Number	ENTERY H208K-P04N-02B or compatible.

Pin #	Symbol	Pin Description
1	VCC	12V input
2	GND	GND
3	Display_ON/OFF	+5.0V or +3.3 V:ON, 0V:OFF
4	Dimming	PWM

AUO Confidential for DATAMODUL Internal Use Only On 2017/03/23

For DATAMODUL Internal Use Only - Provided By pavelkonvalinka On 2017/03/23

7.3 LED Light Bar Input Connector (CN3):

Manufacturer	ENTERY
Connector Model Number	ENTERY 3800K-F03N-03 or compatible
Mating Connecter Model Number	ENTERY H203K-D03N-04B or compatible

Pin #	Symbol	Pin Description
1	AN1	LED anode
2	CA1	LED cathode
3	CA2	LED cathode

Pin #	Symbol	Cable color
1	AN1	Red
2	CA1	Black
3	CA2	Black

8. Reliability Test Criteria

Items	Required Condition	Note
Temperature Humidity Bias	40^0C/90%,300 hours	
High Temperature Operation	85^0C,300 hours	
Low Temperature Operation	-30^0C,300 hours	
Hot Storage	85^0C,300 hours	
Cold Storage	-30^0C,300 hours	
Thermal Shock Test	-20^0C/30 min ,600C/30 min ,100cycles	
Shock Test (Non-Operating)	50G,20ms,Half-sine wave,(±X, ±Y, ±Z)	
Vibration Test (Non-Operating)	1.5G, (10~200Hz, P-P) 30 mins/axis (X, Y, Z)	
On/off test	On/10 sec, Off/10 sec, 30,000 cycles	
ESD	Contact Discharge: ± 8KV, 150pF(330Ω) 1sec, 8 points, 25 times/ point Air Discharge: ± 15KV, 150pF(330Ω) 1sec, 8 points, 25 times/ point	Note 1

Note1: According to EN61000-4-2, ESD class B: Some performance degradation allowed. No data lost

. Self-recoverable. No hardware failures.

AUO Confidential For DATAMODUL Internal Use Only On 2017/03/23

For DATAMODUL Internal Use Only - Provided By pavelkonvalinka On 2017/03/23

9. Mechanical Characteristics

9.1 LCM Front View

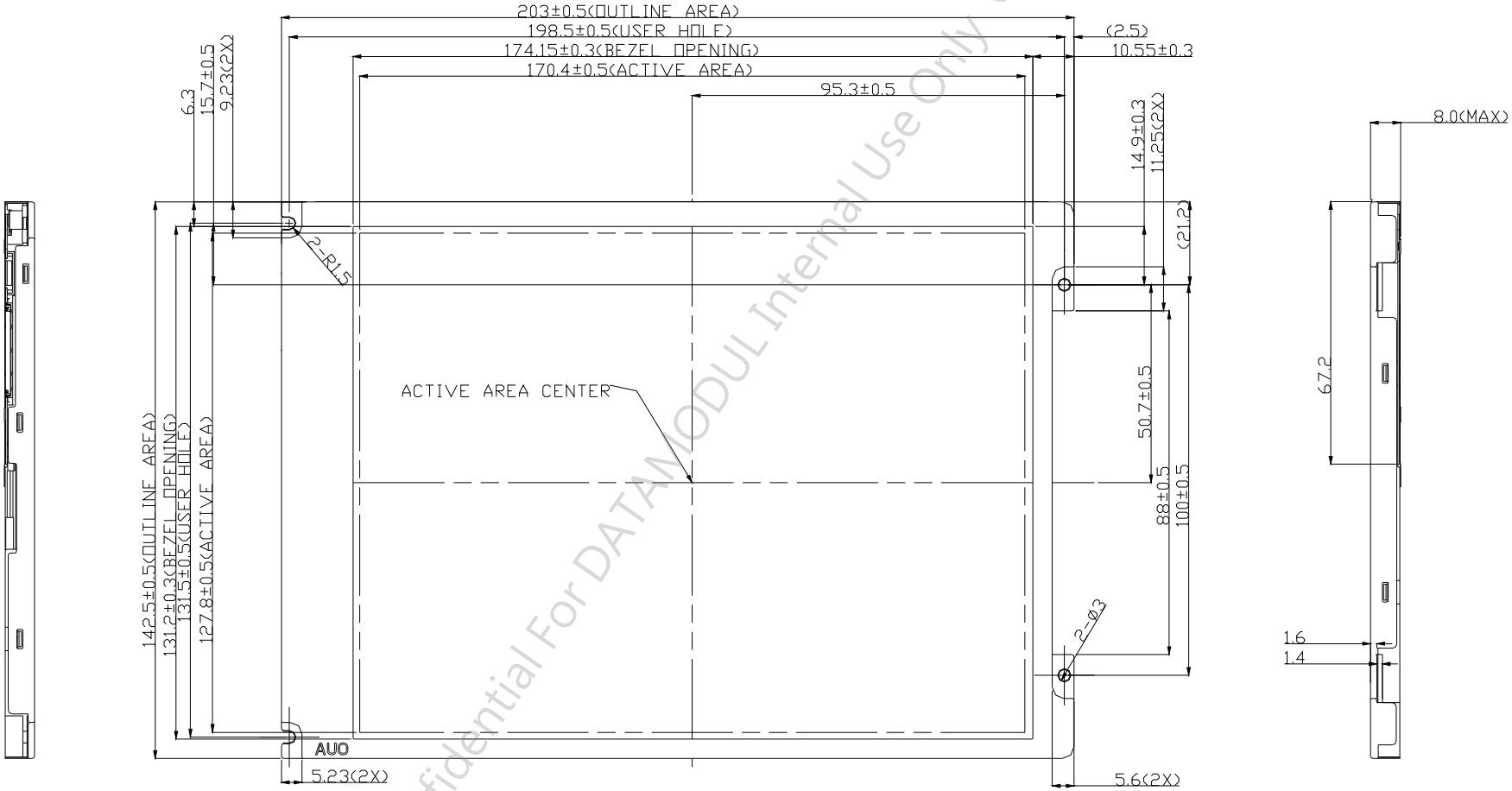

AUO Confidential For DATAMODUL Internal Use Only On 2017/03/23

For DATAMODUL Internal Use Only - Provided By pavelkonvalinka On 2017/03/23

9.2 LCM Rear View

NOTE:
1.CONNECTOR:
CN1:STM MSB24013P20HA
MATING CONNECTOR:
STM P24013P20
CN2:ENTERY 3808K-F04N-02R
MATING CONNECTOR:
ENTERY H208K-P04N-02B
CN3:JAE FI-S3S
MATING CONNECTOR:
JAE FI-S3P-HFE
2.GENERAL TOLERANCE: LEVEL 3
3.CHECK CODE FROM 1 TO 10

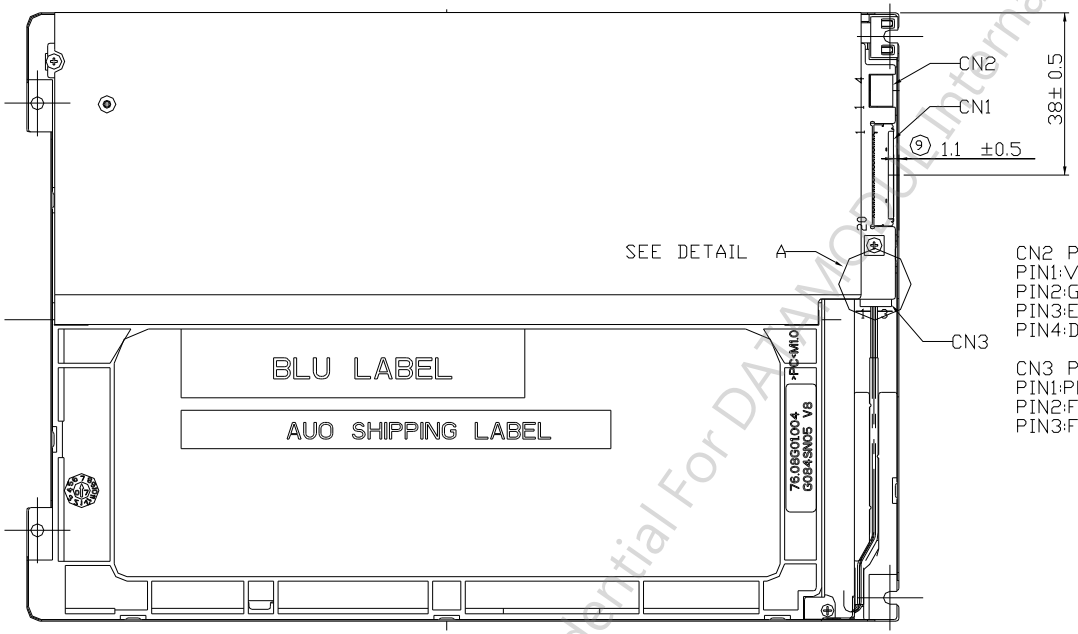

CN2 PIN DEFINITION:
PIN1:VCC
PIN2:GND
PIN3:ENABLE
PIN4:DIMMING

CN3 PIN DEFINITION:
PIN1:POWER IN
PIN2:FEEDBACK1
PIN3:FEEDBACK2

Reminding to check screw's torque value before fastening panel.

AUO Confidential For DATAMODUL Internal Use Only On 2017/03/23

For DATAMODUL Internal Use Only - Provided By pavelkonvalinka On 2017/03/23

10. Label and Packaging

10.1 Shipping Label (on the rear side of TFT-LCD display)

10.2 Carton Package

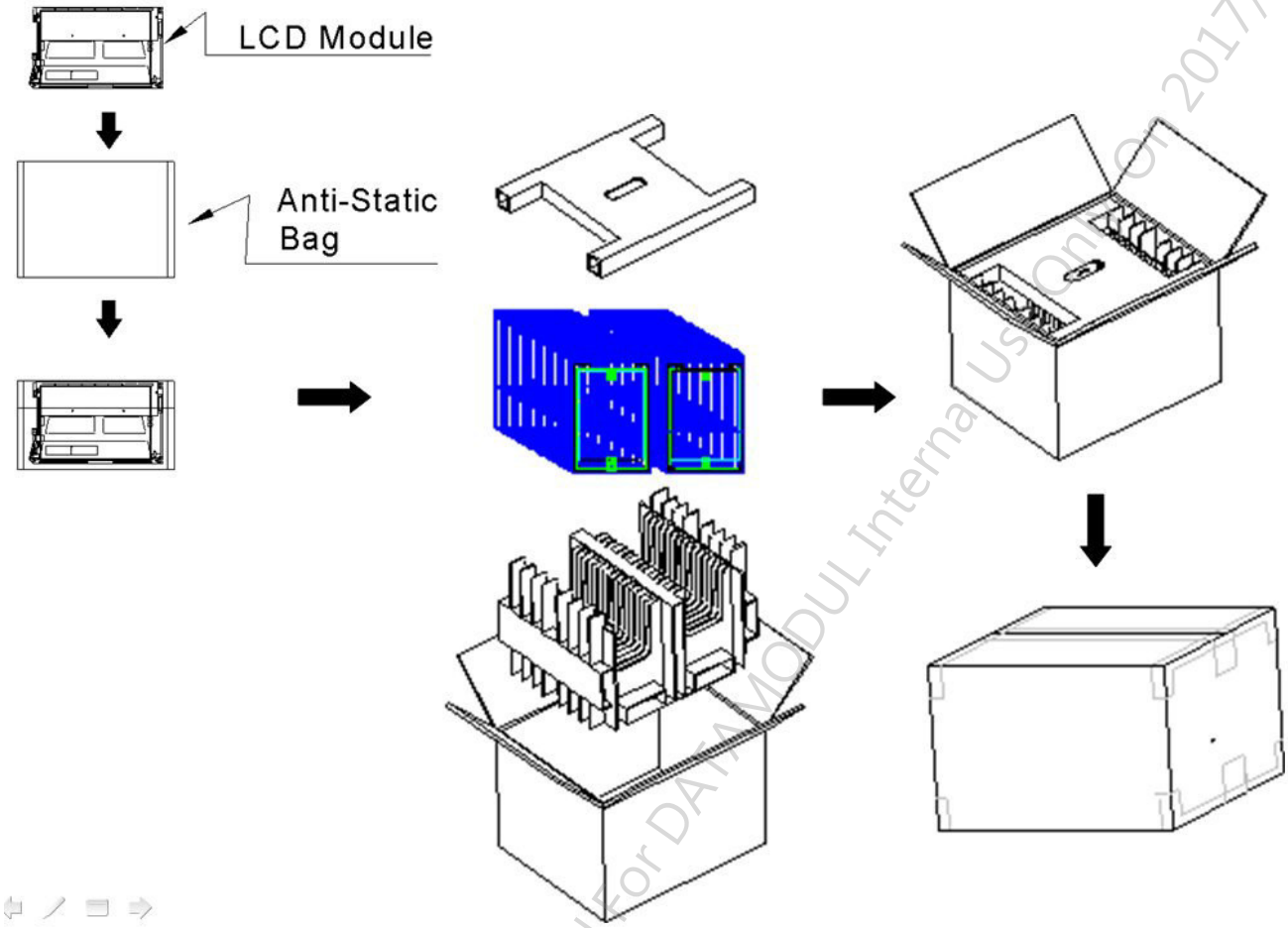

Note:
1. Max. Capacity: 30pcs LCD Modules / per carton
2. Max. Weight: 12 kg / per carton
3. The outside dimension of carton is 405(L) mm x 328(W) mm x 301(H) mm

AUO Confidential For DATAMODUL Internal Use Only On 2017/03/23

For DATAMODUL Internal Use Only - Provided By pavelkonvalinka On 2017/03/23

11 Safety

11.1 Sharp Edge Requirements

There will be no sharp edges or corners on the display assembly that could cause injury.

11.2 Materials

11.2.1 Toxicity

There will be no carcinogenic materials used anywhere in the display module. If toxic materials are used, they will be reviewed and approved by the responsible AUO toxicologist.

11.2.2 Flammability

All components including electrical components that do not meet the flammability grade UL94-V1 in the module will complete the flammability rating exception approval process.

The pRxINted circuit board will be made from material rated 94-V1 or better. The actual UL flammability rating will be pRxINted on the pRxINted circuit board.

11.3 Capacitors

If any polarized capacitors are used in the display assembly, provisions will be made to keep them from being inserted backwards.

11.4 National Test Lab Requirement

The display module will satisfy all requirements for compliance to:

UL 1950, First Edition	U.S.A. Information Technology Equipment

AUO Confidential For DATAMODUL Internal Use Only On 2017/03/23

For DATAMODUL Internal Use Only - Provided By pavelkonvalinka On 2017/03/23

DATA MODUL

ALL TECHNOLOGIES. ALL COMPETENCIES. ONE SPECIALIST.

DATA MODUL AG

Landsberger Straße 322
DE-80687 Munich
Phone: +49-89-56017-0

DATA MODUL WEIKERSHEIM GMBH

Lindenstraße 8
DE-97990 Weikersheim
Phone: +49-7934-101-0

More information and worldwide locations can be found at

www.data-modul.com