DATA MODUL

SPECIFICATION

INNOLUX

G121ACE-LH1

12.1" – SVGA – LVDS

Version: 1.0
Date: 19.08.2022

Note: This specification is subject to change without prior notice

☐ Tentative Specification
■ Preliminary Specification
☐ Approval Specification

MODEL NO.: G121ACE
SUFFIX: LH1

Customer:

APPROVED BY **SIGNATURE**

Name / Title _____ _____
Note

Please return 1 copy for your confirmation with your signature and comments.

Approved By	Checked By	Prepared By
Matt.lc.chen	Sen.lin	Miyabi.ko

CONTENTS

REVISION HISTORY

Version	Date	Page	Description
Ver 0.0	Mar,16,2022	All	Tentative Spec was first issued.
Ver 0.1	Apr,26,2022	9 13 17	Modify Power Supply Current white&Black. Modify pin description. Modify Vertical/ Horizontal Display Term the max value of Total & Blank.
Ver 1.0	Aug,4,2022	32	Add connector cover.

1. GENERAL DESCRIPTION

1.1 OVERVIEW

G121ACE-LH1 is a 12.1" TFT Liquid Crystal Display module with LED Backlight unit LVDS interface. This module supports 800 x 600 SVGA AAS mode and can display 262k/16.7M colors . The LED converter for Backlight is built in control board..

1.2 FEATURE

- SVGA (800 x 600 pixels) resolution
- PSWG (Panel Standardization Working Group)
- Wide operating temperature.
- RoHS compliance

1.3 APPLICATION

-TFT LCD Monitor
- Factory Application
- Amusement

1.4 GENERAL SPECIFICATI0NS

Item	Specification	Unit	Note
Active Area	246(H)*184.5(V)	mm	(1)
Driver Element	a-Si TFT active matrix	-	-
Pixel Number	800x R.G.B x 600	pixel	-
Pixel Pitch	0.3075(H)*0.3075(V)	mm	-
Pixel Arrangement	RGB vertical Stripe	-	-
Display Colors	262k/16.7M	color	-
Display Mode	Normally Black	-	-
Surface Treatment	AG type, 3H hard coating	-	-
Module Power Consumption	8.34W	W	

1.5 MECHANICAL SPECIFICATIONS

Item		Min.	Typ.	Max.	Unit	Note
Module Size	Horizontal(H)	260.0	260.5	261.0	mm	(1)
	Vertical(V)	203.5	204.0	204.5	mm	
	Depth(D)	7.9	8.4	8.9	mm	
Bezel Area	Horizontal	248.7	249	249.3	mm	-
	Vertical	187.2	187.5	187.8	mm	
Active Area	Horizontal	-	246	-	mm	
	Vertical	-	184.5	-	mm	
Weight			470	490	g	

Note (1)Please refer to the attached drawings for more information of front and back outline dimensions.

2. ABSOLUTE MAXIMUM RATINGS

2.1 ABSOLUTE RATINGS OF ENVIRONMENT

Item	Symbol	Value		Unit	Note
		Min.	Max.		
Operating Ambient Temperature	T_{OP}	-30	+85	℃	(1)(2)
Storage Temperature	T_{ST}	-30	+85	℃	

Note (1)

(a) 90 %RH Max. (Ta <= 39 ºC)

(b) Wet-bulb temperature should be 39 ºC Max.

(c) No condensation.

Note (2) Panel surface temperature should be 0℃ min. and 80℃ max under Vcc=5.0V, fr =60Hz, typical LED string current, 25℃ ambient temperature, and no humidity control . Any condition of ambient operating temperature ,the surface of active area should be keeping not higher than 80℃.

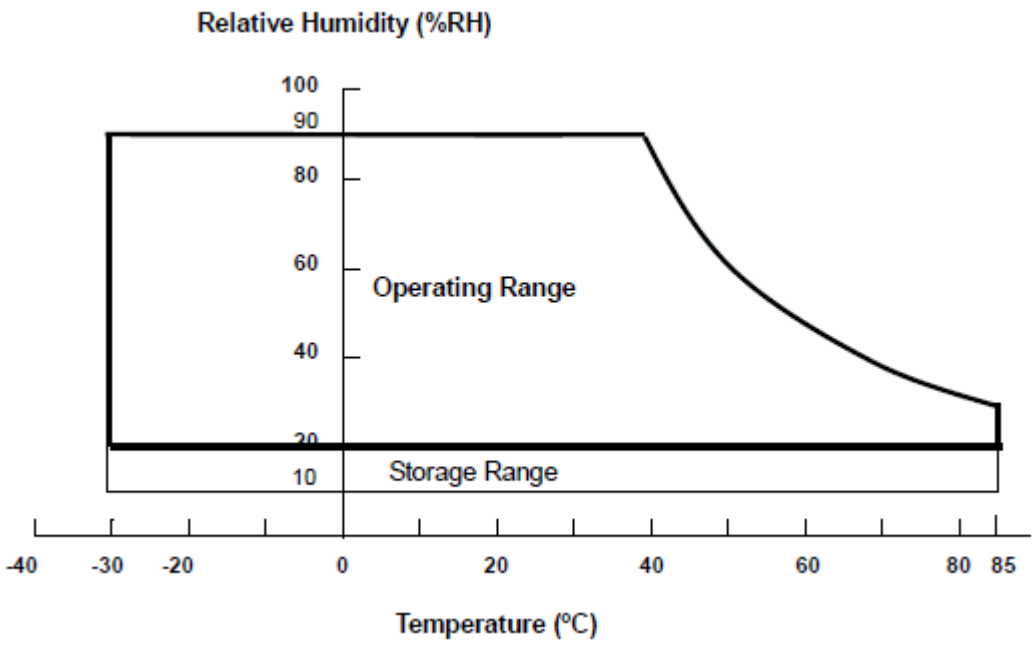

2.2 ELECTRICAL ABSOLUTE RATINGS

2.2.1 TFT LCD MODULE

Item	Symbol	Value		Unit	Note
		Min.	Max.		
Power Supply Voltage	VCC	-0.3	6	V	(1)
Logic Input Voltage	V_{IN}	-0.3	3.6	V	

2.2.2 BACKLIGHT UNIT

Item	Symbol	Value		Unit	Note
		Min.	Max.		
Converter Voltage	V_i	-0.3	18	V	(1) , (2)
Enable Voltage	EN	---	5.5	V	
Backlight Adjust	Dimming	---	5.5	V	

Note (1) Permanent damage to the device may occur if maximum values are exceeded. Function operation should be restricted to the conditions described under Normal Operating Conditions.

Note (2) Specified values are for LED (Refer to 3.2 for further information)

3. ELECTRICAL CHARACTERISTICS

3.1 TFT LCD MODULE

Parameter		Symbol	Value			Unit	Note
			Min.	Typ.	Max.		
Power Supply Voltage		V_{CC}	4.75	5.0	5.25	V	-
Ripple Voltage		V_{RP}	-	-	300	mVp-p	
Inrush Current		I_{INRUSH}	-	-	1.5	A	(2)
Power Supply Current	White	Icc	-	87.96	105.64	mA	(3)a
	Black		-	87.88	105.5	mA	(3)b
LVDS differential input voltage		V_{id}	200		600	mV	
LVDS common input voltage		V_{ic}	1	1.2	1.4	V	
Differential Input Voltage for LVDS Receiver Threshold	"H" Level				100	mV	-
	"L" Level	-100				mV	-
Logic High Input Voltage		VIH	2.7	-	3.4	V	
Logic Low Input Voltage		VIL	-	-	0.3	V	
Terminating Resistor		R_T		100		Ohm	-

Note (1)The module should be always operated within above ranges.

Note (2)Measurement Conditions:

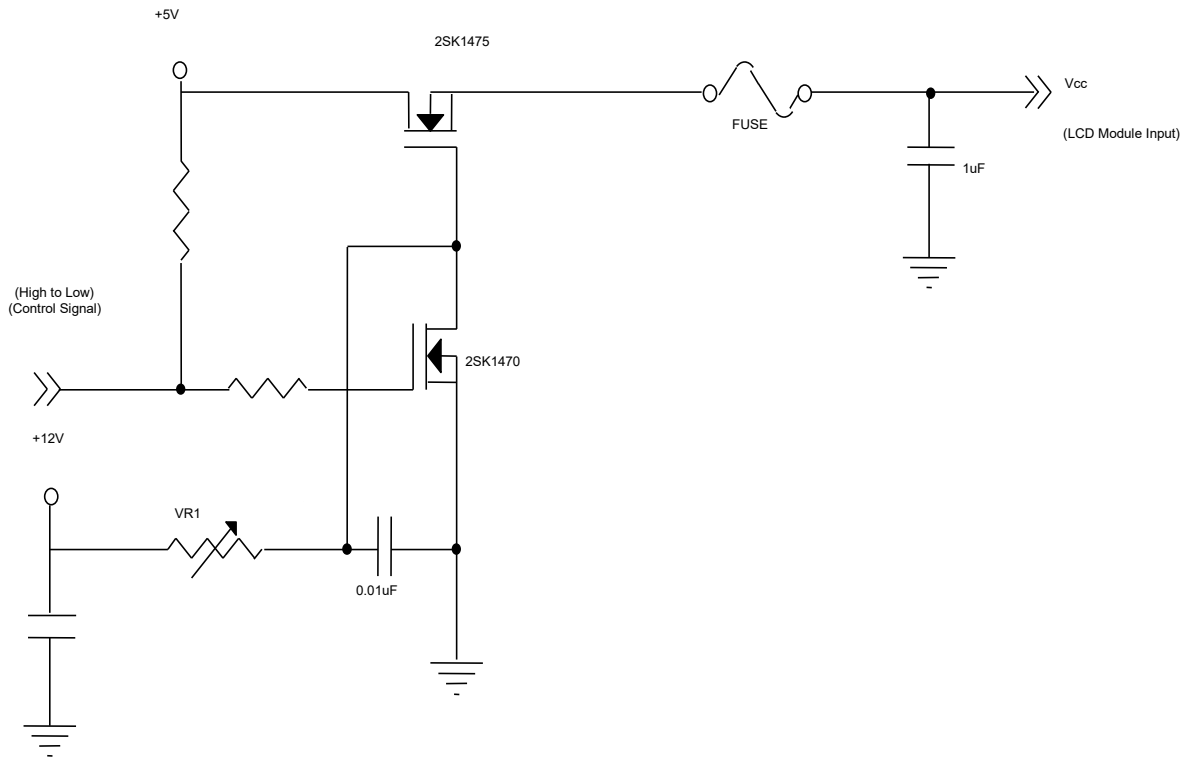

VCC rising time is 470μs

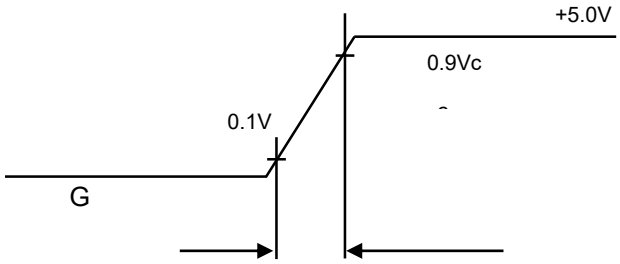

Note (3) The specified power supply current is under the conditions at Ta = 25 ± 2 ℃, DC Current and f_v = 60 Hz, whereas a power dissipation check pattern below is displayed.

a. White Pattern

Active Area

b. Black Pattern

Active Area

3.2 BACKLIGHT UNIT

Ta = 25 ± 2 ºC

Parameter		Symbol	Value			Unit	Note
			Min.	Typ.	Max.		
Converter Input Voltage		V_i	10.8	12	13.2	V_{DC}	(Duty 100%)
Converter Input Ripple Voltage		V_{iRP}			500	mV	
Converter Input Current		I_i	0.4	0.6	0.8	A_{DC}	@ Vi = 12V (Duty 100%)
Converter Inrush Current		I_{iRUSH}			3	A	@ Vi rising time=20ms (Vi=12V)
Input Power Consumption		P_i		7.2		W	(1)
EN Control Level	Backlight on	Dimming (E_PWM)	2.0	3.3	5.0	V	
	Backlight off		0	-	0.3	V	
PWM Control Level	PWM High Level		2.0	-	5.0	V	
	PWM Low Level		0	-	0.15	V	
PWN Noise Range		VNoise			0.1	V	
PWM Control Frequency		f_{PWM}	190	200	20k	Hz	(2)
PWM Dimming Control Duty Ratio		-	5	-	100	%	(2), @ 190Hz<f_{PWM}<1kHz
			20	-	100	%	(2), @ 1kHz≦f_{PWM}<20kHz
LED Life Time		L_{LED}	50,000		-	Hrs	(3)

Note (1)LED current is measured by utilizing a high frequency current meter as shown below:

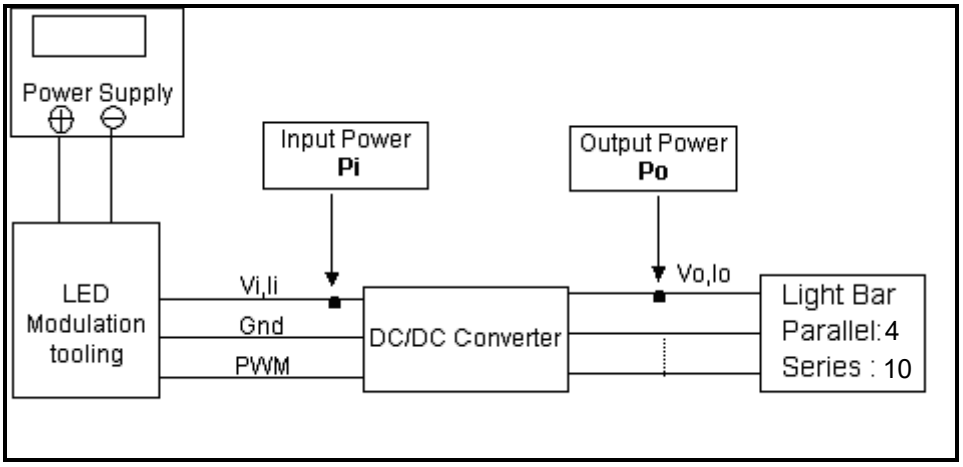

Note (2) The lifetime of LED is estimated data and defined as the time when it continues to operate under the conditions at Ta = 25 ±2 ºC and Duty 100% until the brightness becomes ≦ 50% of its original value. Operating LED at high temperature condition will reduce life time and lead to color shift.

Note (3) At 190 ~1kHz PWM control frequency, duty ratio range is restricted from 5% to 100%.
1K ~20kHz PWM control frequency, duty ratio range is restricted from 20% to 100%.
If PWM control frequency is applied in the range from 1KHz to 20KHZ, The "non-linear" phenomenon on the Backlight Unit may be found. So It's a suggestion that PWM control frequency should be less than 1KHz.

4. BLOCK DIAGRAM

4.1 TFT LCD MODULE

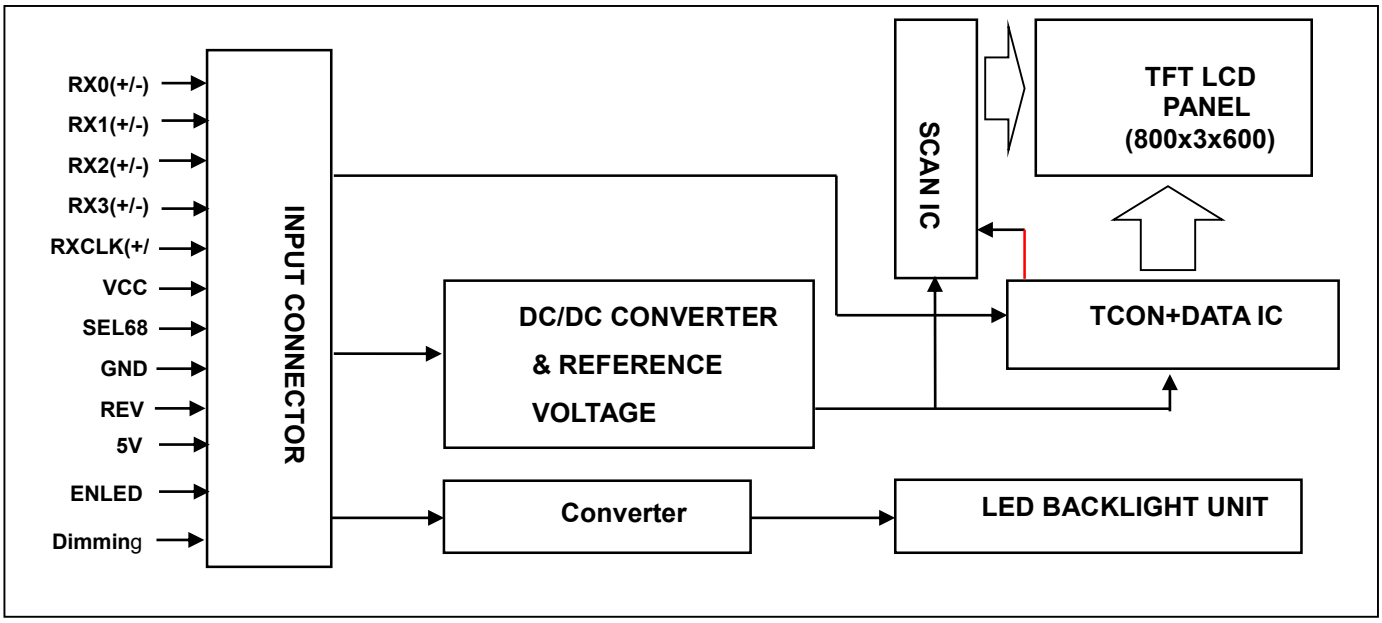

5. INPUT TERMINAL PIN ASSIGNMENT

5.1 TFT LCD MODULE

Pin No.	Symbol	Function	Note
1	VCC	Power supply	
2	VCC	Power supply	
3	REV	Reverse Scan Control, Low or NC → Normal Mode. High → Reverse Scan	Note (2).(3)
4	NC	No Connection	
5	NC	No Connection	
6	SEL6/8	LVDS 6/8 bit select function control, Low or NC → 6 bit Input Mode High → 8bit Input Mode	Note (2).(3)
7	NC	No Connection	
8	NC	No Connection	
9	NC	No Connection	
10	NC	No Connection	
11	NC	No Connection	
12	NC	No Connection	
13	NC	No Connection	
14	GND	Ground	
15	NC	No Connection	
16	NC	No Connection	
17	GND	Ground	
18	NC	No Connection	
19	NC	No Connection	
20	RX3+	Differential Data Input, CH3 (Positive)	
21	RX3-	Differential Data Input, CH3 (Negative)	
22	RXC+	Differential Clock Input (Positive)	
23	RXC-	Differential Clock Input (Negative)	
24	GND	Ground	
25	RX2+	Differential Data Input, CH2 (Positive)	
26	RX2-	Differential Data Input, CH2 (Negative)	
27	RX1+	Differential Data Input, CH1 (Positive)	
28	RX1-	Differential Data Input, CH1 (Negative)	
29	RX0+	Differential Data Input, CH0 (Positive)	
30	RX0-	Differential Data Input, CH0 (Negative)	

Note (1) Connector Part No.: STM MSAK24025P30MB or I-PEX 20455-030E-76 or equivalent.

User's connector Part No.: I-PEX 20453-030T-03 or equivalent.

Note (2) “Low” stands for 0V. “High” stands for 3.3V

Note (3) Interface optional pin has internal scheme as following diagram, Customer should keep the interface voltage level requirement which including panel board loading as below.

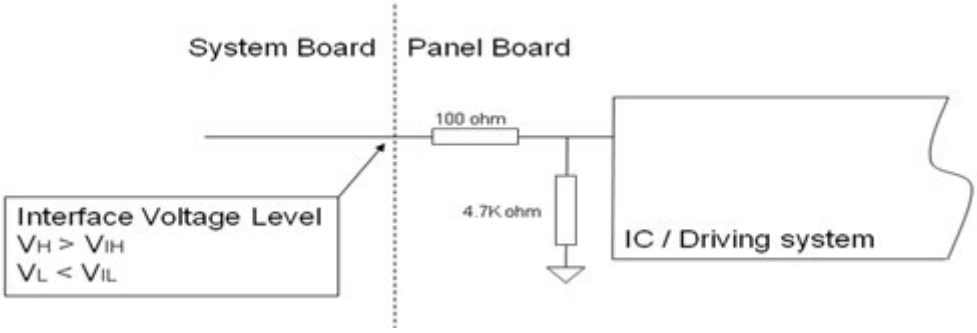

5.2 BACKLIGHT UNIT(Converter connector pin)

Pin	Symbol	Description	Remark
1	NC	Not Connect	
2	Dimming	Backlight Adjust	PWM Dimming (Hi: $3.3V_{DC}$, Lo: $0V_{DC}$)
3	EN	Enable pin	3.3V
4	V_{GND}	Converter ground	Ground
5	V_i	Converter input voltage	12V

Note (1)Connector Part No.: Cvilux CI4205M2HRD-NH or AECS 50277-00501-002 or equivalent.

Note (2)User's connector Part No.: Cvilux CI4205SL000 or equivalent.

E_PWM Pin

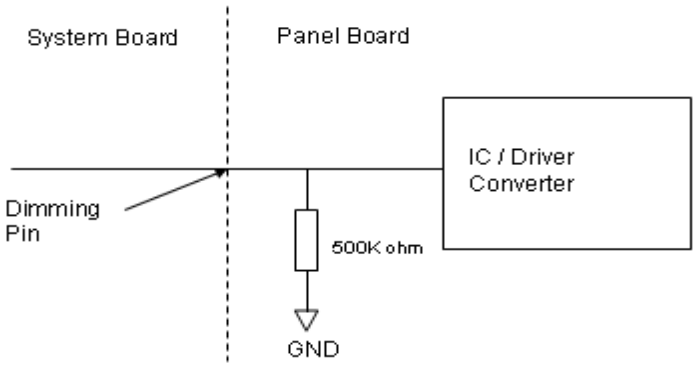

BLON Pin

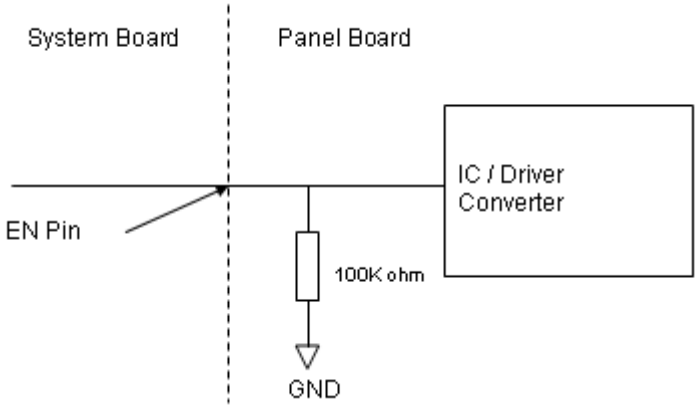

5.3 COLOR DATA INPUT ASSIGNMENT

The brightness of each primary color (red, green and blue) is based on the 6-bit gray scale data input for the color. The higher the binary input, the brighter the color. The table below provides the assignment of color.

Color		Data Signal																	
		Red						Green						Blue					
		R5	R4	R3	R2	R1	R0	G5	G4	G3	G2	G1	G0	B5	B4	B3	B2	B1	B0
Basic Colors	Black	0	0	0	0	0	0	0	0	0	0	0	0	0	0	0	0	0	0
	Red	1	1	1	1	1	1	0	0	0	0	0	0	0	0	0	0	0	0
	Green	0	0	0	0	0	0	1	1	1	1	1	1	0	0	0	0	0	0
	Blue	0	0	0	0	0	0	0	0	0	0	0	0	1	1	1	1	1	1
	Cyan	0	0	0	0	0	0	1	1	1	1	1	1	1	1	1	1	1	1
	Magenta	1	1	1	1	1	1	0	0	0	0	0	0	1	1	1	1	1	1
	Yellow	1	1	1	1	1	1	1	1	1	1	1	1	0	0	0	0	0	0
	White	1	1	1	1	1	1	1	1	1	1	1	1	1	1	1	1	1	1
Gray Scale Of Red	Red(0)/Dark	0	0	0	0	0	0	0	0	0	0	0	0	0	0	0	0	0	0
	Red(1)	0	0	0	0	0	1	0	0	0	0	0	0	0	0	0	0	0	0
	Red(2)	0	0	0	0	1	0	0	0	0	0	0	0	0	0	0	0	0	0
	:	:	:	:	:	:	:	:	:	:	:	:	:	:	:	:	:	:	:
	:	:	:	:	:	:	:	:	:	:	:	:	:	:	:	:	:	:	:
	Red(61)	1	1	1	1	0	1	0	0	0	0	0	0	0	0	0	0	0	0
	Red(62)	1	1	1	1	1	0	0	0	0	0	0	0	0	0	0	0	0	0
	Red(63)	1	1	1	1	1	1	0	0	0	0	0	0	0	0	0	0	0	0
Gray Scale Of Green	Green(0)/Dark	0	0	0	0	0	0	0	0	0	0	0	0	0	0	0	0	0	0
	Green(1)	0	0	0	0	0	0	0	0	0	0	0	1	0	0	0	0	0	0
	Green(2)	0	0	0	0	0	0	0	0	0	0	1	0	0	0	0	0	0	0
	:	:	:	:	:	:	:	:	:	:	:	:	:	:	:	:	:	:	:
	:	:	:	:	:	:	:	:	:	:	:	:	:	:	:	:	:	:	:
	Green(61)	0	0	0	0	0	0	1	1	1	1	0	1	0	0	0	0	0	0
	Green(62)	0	0	0	0	0	0	1	1	1	1	1	0	0	0	0	0	0	0
	Green(63)	0	0	0	0	0	0	1	1	1	1	1	1	0	0	0	0	0	0
Gray Scale Of Blue	Blue(0)/Dark	0	0	0	0	0	0	0	0	0	0	0	0	0	0	0	0	0	0
	Blue(1)	0	0	0	0	0	0	0	0	0	0	0	0	0	0	0	0	0	1
	Blue(2)	0	0	0	0	0	0	0	0	0	0	0	0	0	0	0	0	1	0
	:	:	:	:	:	:	:	:	:	:	:	:	:	:	:	:	:	:	:
	:	:	:	:	:	:	:	:	:	:	:	:	:	:	:	:	:	:	:
	Blue(61)	0	0	0	0	0	0	0	0	0	0	0	0	1	1	1	1	0	1
	Blue(62)	0	0	0	0	0	0	0	0	0	0	0	0	1	1	1	1	1	0
	Blue(63)	0	0	0	0	0	0	0	0	0	0	0	0	1	1	1	1	1	1

Note (1) 0: Low Level Voltage, 1: High Level Voltage

The brightness of each primary color (red, green and blue) is based on the 8-bit gray scale data input for the color. The higher the binary input the brighter the color. The table below provides the assignment of color versus data input.

Color		Data Signal																							
		Red								Green								Blue							
		R7	R6	R5	R4	R3	R2	R1	R0	G7	G6	G5	G4	G3	G2	G1	G0	B7	B6	B5	B4	B3	B2	B1	B0
Basic Colors	Black	0	0	0	0	0	0	0	0	0	0	0	0	0	0	0	0	0	0	0	0	0	0	0	0
	Red	1	1	1	1	1	1	1	1	0	0	0	0	0	0	0	0	0	0	0	0	0	0	0	0
	Green	0	0	0	0	0	0	0	0	1	1	1	1	1	1	1	1	0	0	0	0	0	0	0	0
	Blue	0	0	0	0	0	0	0	0	0	0	0	0	0	0	0	0	1	1	1	1	1	1	1	1
	Cyan	0	0	0	0	0	0	0	0	1	1	1	1	1	1	1	1	1	1	1	1	1	1	1	1
	Magenta	1	1	1	1	1	1	1	1	0	0	0	0	0	0	0	0	1	1	1	1	1	1	1	1
	Yellow	1	1	1	1	1	1	1	1	1	1	1	1	1	1	1	1	0	0	0	0	0	0	0	0
	White	1	1	1	1	1	1	1	1	1	1	1	1	1	1	1	1	1	1	1	1	1	1	1	1
Gray Scale Of Red	Red(0) / Dark	0	0	0	0	0	0	0	0	0	0	0	0	0	0	0	0	0	0	0	0	0	0	0	0
	Red(1)	0	0	0	0	0	0	0	1	0	0	0	0	0	0	0	0	0	0	0	0	0	0	0	0
	Red(2)	0	0	0	0	0	0	1	0	0	0	0	0	0	0	0	0	0	0	0	0	0	0	0	0
	:	:	:	:	:	:	:	:	:	:	:	:	:	:	:	:	:	:	:	:	:	:	:	:	:
	:	:	:	:	:	:	:	:	:	:	:	:	:	:	:	:	:	:	:	:	:	:	:	:	:
	Red(253)	1	1	1	1	1	1	0	1	0	0	0	0	0	0	0	0	0	0	0	0	0	0	0	0
	Red(254)	1	1	1	1	1	1	1	0	0	0	0	0	0	0	0	0	0	0	0	0	0	0	0	0
	Red(255)	1	1	1	1	1	1	1	1	0	0	0	0	0	0	0	0	0	0	0	0	0	0	0	0
Gray Scale Of Green	Green(0)/Dark	0	0	0	0	0	0	0	0	0	0	0	0	0	0	0	0	0	0	0	0	0	0	0	0
	Green(1)	0	0	0	0	0	0	0	0	0	0	0	0	0	0	0	1	0	0	0	0	0	0	0	0
	Green(2)	0	0	0	0	0	0	0	0	0	0	0	0	0	0	1	0	0	0	0	0	0	0	0	0
	:	:	:	:	:	:	:	:	:	:	:	:	:	:	:	:	:	:	:	:	:	:	:	:	:
	:	:	:	:	:	:	:	:	:	:	:	:	:	:	:	:	:	:	:	:	:	:	:	:	:
	Green(253)	0	0	0	0	0	0	0	0	1	1	1	1	1	1	0	1	0	0	0	0	0	0	0	0
	Green(254)	0	0	0	0	0	0	0	0	1	1	1	1	1	1	1	0	0	0	0	0	0	0	0	0
	Green(255)	0	0	0	0	0	0	0	0	1	1	1	1	1	1	1	1	0	0	0	0	0	0	0	0
Gray Scale Of Blue	Blue(0) / Dark	0	0	0	0	0	0	0	0	0	0	0	0	0	0	0	0	0	0	0	0	0	0	0	0
	Blue(1)	0	0	0	0	0	0	0	0	0	0	0	0	0	0	0	0	0	0	0	0	0	0	0	1
	Blue(2)	0	0	0	0	0	0	0	0	0	0	0	0	0	0	0	0	0	0	0	0	0	0	1	0
	:	:	:	:	:	:	:	:	:	:	:	:	:	:	:	:	:	:	:	:	:	:	:	:	:
	:	:	:	:	:	:	:	:	:	:	:	:	:	:	:	:	:	:	:	:	:	:	:	:	:
	Blue(253)	0	0	0	0	0	0	0	0	0	0	0	0	0	0	0	0	1	1	1	1	1	1	0	1
	Blue(254)	0	0	0	0	0	0	0	0	0	0	0	0	0	0	0	0	1	1	1	1	1	1	1	0
	Blue(255)	0	0	0	0	0	0	0	0	0	0	0	0	0	0	0	0	1	1	1	1	1	1	1	1

Note (1)0: Low Level Voltage, 1: High Level Voltage

6. INTERFACE TIMING

6.1 INPUT SIGNAL TIMING SPECIFICATIONS

The input signal timing specifications are shown as the following table and timing diagram.

Signal	Item	Symbol	Min.	Typ.	Max.	Unit	Note
LVDS Clock	Frequency	F_c	34	40	48.3	MHz	-
	Period	T_c	20.7	25	29.	ns	
	Input Clock to data skew	TLVCCS	-	-	0.25	UI	(a)
	Spread spectrum modulation range	F_{clkin_mod}	-1.5		1.5	%	(b)
	Spread spectrum modulation frequency	F_{SSM}	25		90	KHz	
Vertical Display Term	Frame Rate	F_r	60	60	60	Hz	$T_v=T_{vd}+T_{vb}$
	Total	T_v	610	628	792	T_h	-
	Active Display	T_{vd}	600	600	600	T_h	-
	Blank	T_{vb}	10	28	192	T_h	-
Horizontal Display Term	Total	T_h	960	1056	1060	T_c	$T_h=T_{hd}+T_{hb}$
	Active Display	T_{hd}	800	800	800	T_c	-
	Blank	T_{hb}	160	256	260	T_c	-

Note (1) Because this module is operated by DE only mode, Hsync and Vsync input signals should be set to low logic level or ground. Otherwise, this module would operate abnormally.

Note (2) The Tv(Tvd+Tvb) must be integer, otherwise, the module would operate abnormally.

INPUT SIGNAL TIMING DIAGRAM

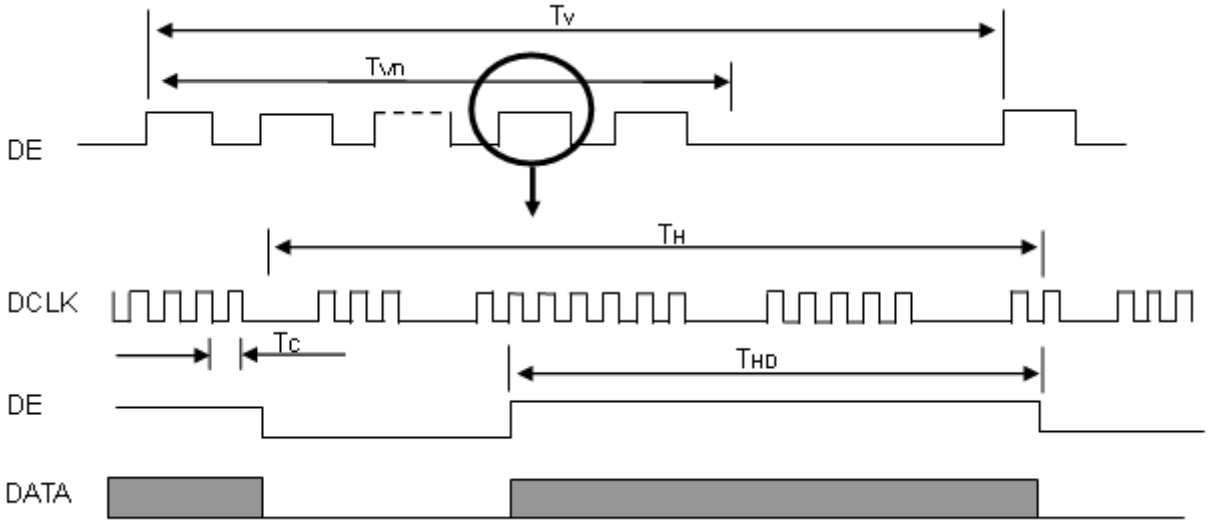

TIMING DIAGRAM of LVDS

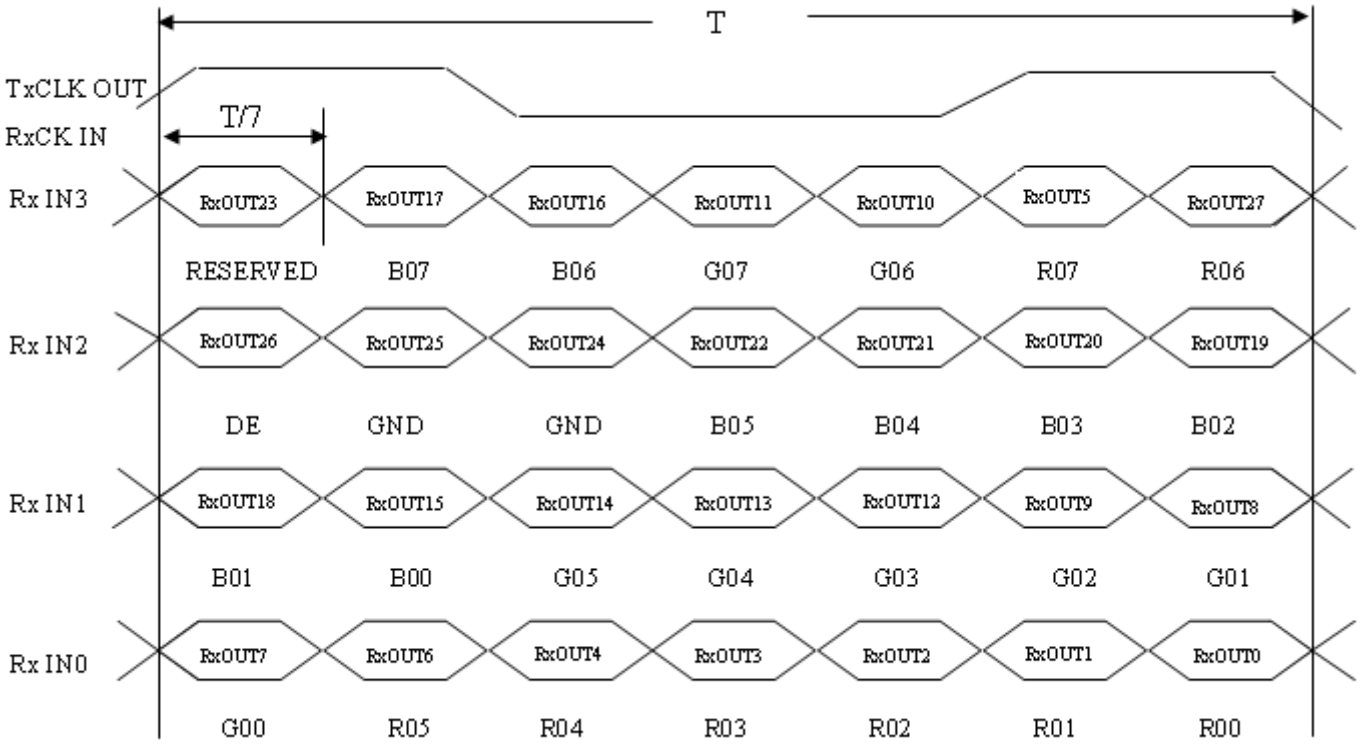

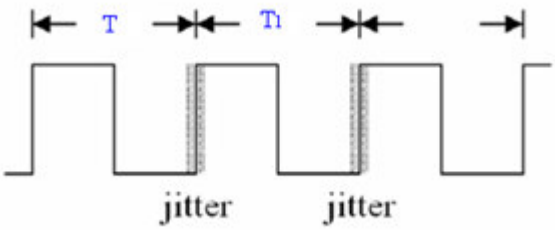

Note (a) Input Clock to data skew is defined as below figures.

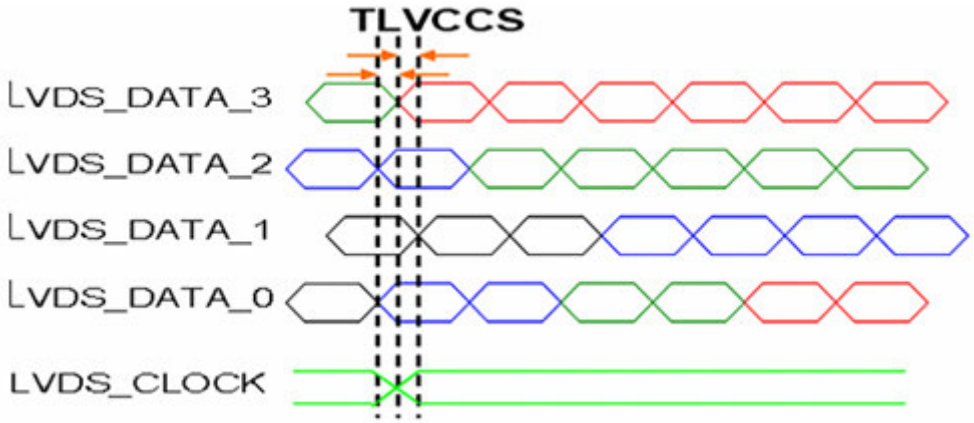

Note (b) The SSCG (Spread spectrum clock generator) is defined as below figures.

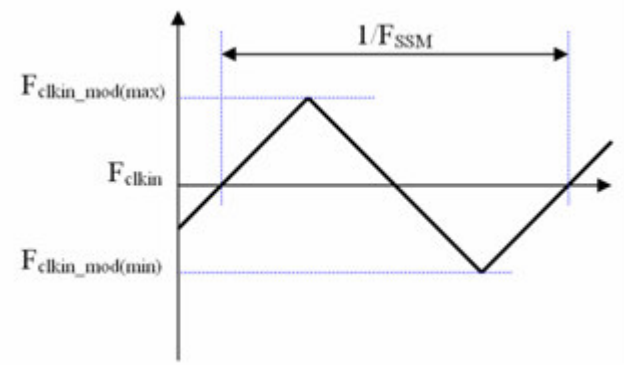

6.2 POWER ON/OFF SEQUENCE

To prevent a latch-up or DC operation of LCD assembly, the power on/off sequence should be as the diagram below.

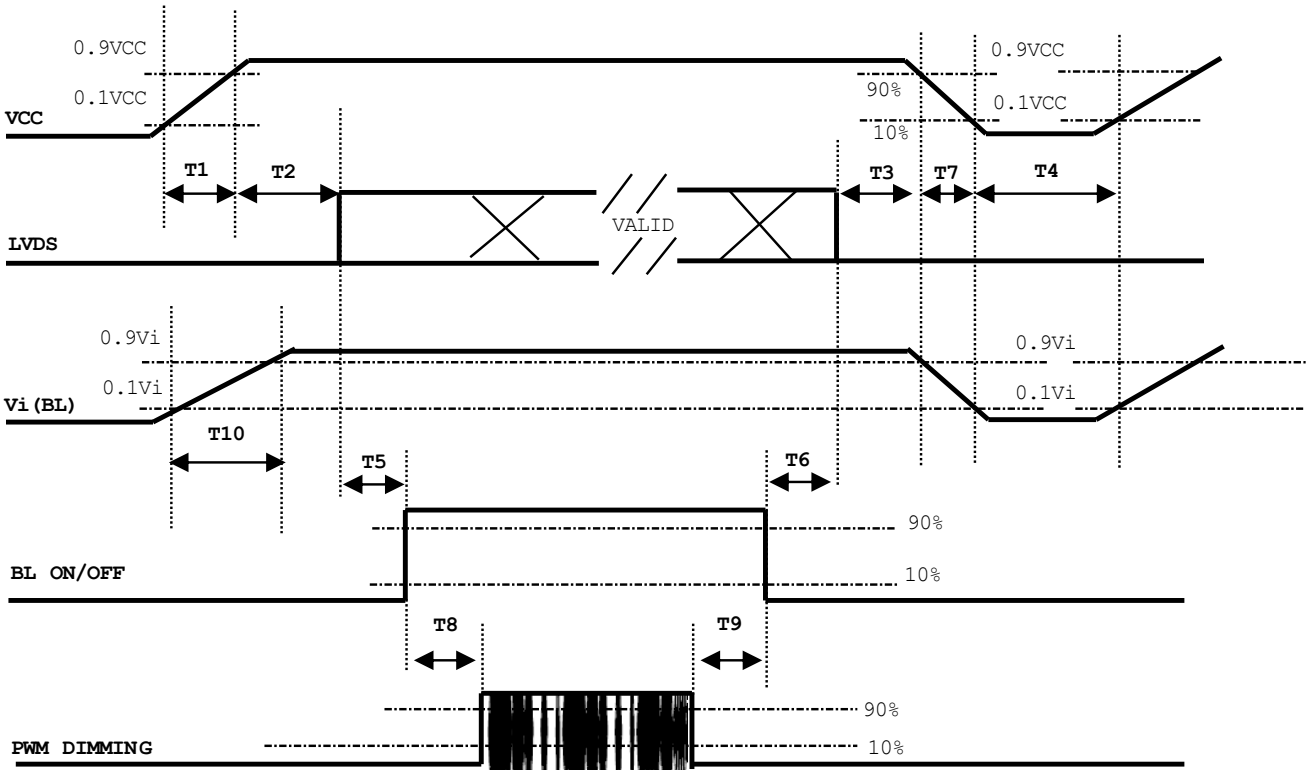

Parameter	Value			Units
	Min	Typ	Max	
T1	0.5	-	10	ms
T2	0	-	50	ms
T3	0	-	50	ms
T4	500	-	-	ms
T5	450	-	-	ms
T6	200	-	-	ms
T7	10	-	100	ms
T8	10	-	-	ms
T9	10	-	-	ms
T10	20	-	50	ms

Note:

(1) The supply voltage of the external system for the module input should be the same as the definition of Vcc.

(2) When the backlight turns on before the LCD operation of the LCD turns off, the display may momentarily become abnormal screen.

(3) In case of VCC = off level, please keep the level of input signals on the low or keep a high impedance.

(4) T4 should be measured after the module has been fully discharged between power off and on period.

(5) Interface signal shall not be kept at high impedance when the power is on.

(6) INX won't take any responsibility for the products which are damaged by the customers not following the Power Sequence.

(7) There might be slight electronic noise when LCD is turned off (even backlight unit is also off). To avoid this symptom, we suggest "Vcc falling timing" to follow "T7 spec".

6.3 The INPUT DATA FORMAT

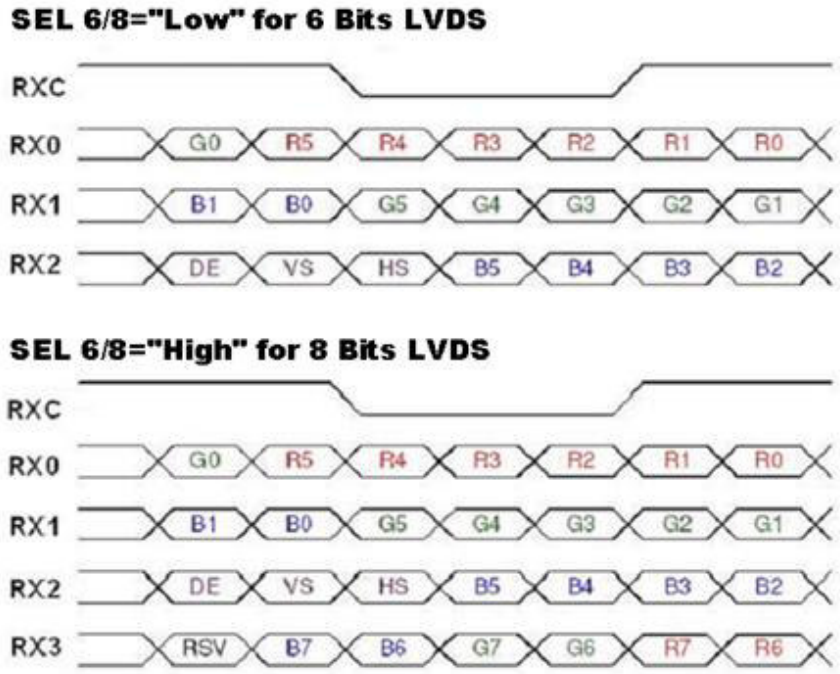

Note (1) R/G/B data 7: MSB, R/G/B data 0: LSB

Note (2) Please follow PSWG

Signal Name	Description	Remark
R7 R6 R5 R4 R3 R2 R1 R0	Red Data 7 (MSB) Red Data 6 Red Data 5 Red Data 4 Red Data 3 Red Data 2 Red Data 1 Red Data 0 (LSB)	Red-pixel Data Each red pixel's brightness data consists of these 8 bits pixel data.
G7 G6 G5 G4 G3 G2 G1 G0	Green Data 7 (MSB) GreenData 6 GreenData 5 GreenData 4 GreenData 3 GreenData 2 GreenData 1 GreenData 0 (LSB)	Green-pixel Data Each green pixel's brightness data consists of these 8 bits pixel data.
B7 B6 B5 B4 B3 B2 B1 B0	Blue Data 7 (MSB) Blue Data 6 Blue Data 5 Blue Data 4 Blue Data 3 Blue Data 2 Blue Data 1 Blue Data 0 (LSB)	Blue-pixel Data Each blue pixel's brightness data consists of these 8 bits pixel data.
RXCLKIN+ RXCLKIN-	LVDS Clock Input	
DE	Display Enable	
VS	Vertical Sync	
HS	Horizontal Sync	

7. OPTICAL CHARACTERISTICS

7.1 TEST CONDITIONS

Item	Symbol	Value	Unit
Ambient Temperature	Ta	25±2	oC
Ambient Humidity	Ha	50±10	%RH
Supply Voltage	According to typical value and tolerance in "ELECTRICAL CHARACTERISTICS"		
Input Signal			
PWM Duty Ratio	D	100	%

7.2 OPTICAL SPECIFICATIONS

The relative measurement methods of optical characteristics are shown here and all items are measured at the center point of screen unless otherwise noted. The following items should be measured under the test conditions described above and stable conditions shown in Note (5).

Item		Symbol	Condition	Min.	Typ.	Max.	Unit	Note
Color Chromaticity	Red	Rx	θX=0°, θY =0° Grayscale Maximum	0.599	0.649	0.699	-	(1), (5)
		Ry		0.290	0.340	0.390		
	Green	Gx		0.270	0.320	0.370		
		Gy		0.556	0.606	0.656		
	Blue	Bx		0.099	0.149	0.199		
		By		0.005	0.055	0.105		
	White	Wx		0.263	0.313	0.363		
		Wy		0.279	0.329	0.379		
Center Luminance of White		L_C		400	450	-	-	(4), (5)
Contrast Ratio		CR		700	1000	-	-	(2), (5)
Response Time		T_R	θ_X=0°, θ_Y =0°	-	13	18	-	(3)
		T_F		-	12	17	-	
White Variation		δW	θ_X=0°, θ_Y =0°	70	80	-	%	(5), (6)
Viewing Angle	Horizontal	θ_X+		80	89	-	Deg.	(1), (5)
		θ_X-		80	89	-		
	Vertical	θ_Y+		80	89	-		
		θ_Y-		80	89	-		

Definition：

Grayscale Maximum : Grayscale 255 (10 bits: grayscale 1023 ; 8 bits : grayscale 255 ; 6 bits: grayscale 63)

White : Luminance of Grayscale Maximum (All R,G,B)

Black : Luminance of grayscale 0 (All R,G,B)

Note (1)Definition of Viewing Angle (θx, θy):

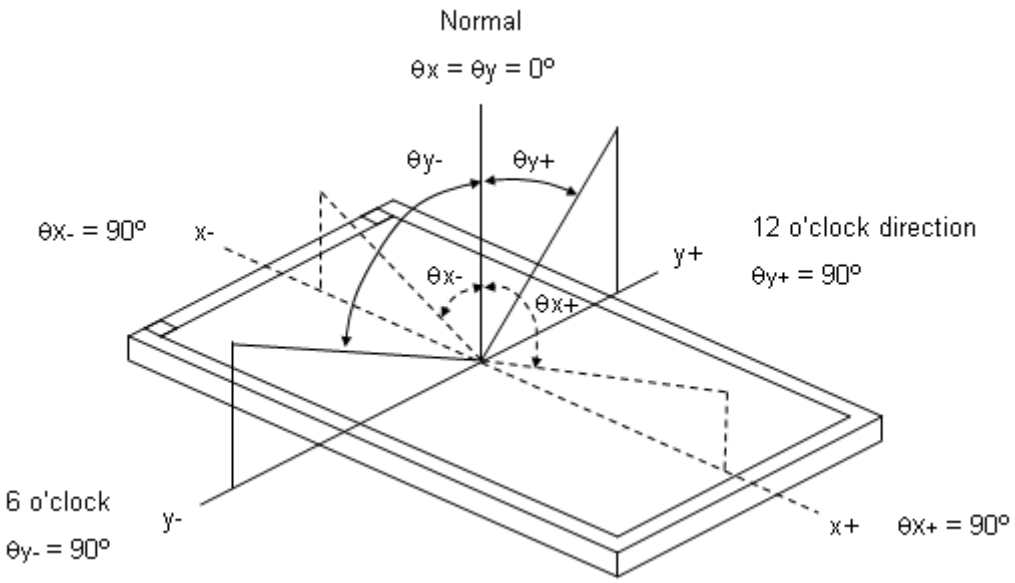

Note (2)Definition of Contrast Ratio (CR):

The contrast ratio can be calculated by the following expression at center point.

Contrast Ratio (CR) = White / Black

Note (3)Definition of Response Time (T_R, T_F):

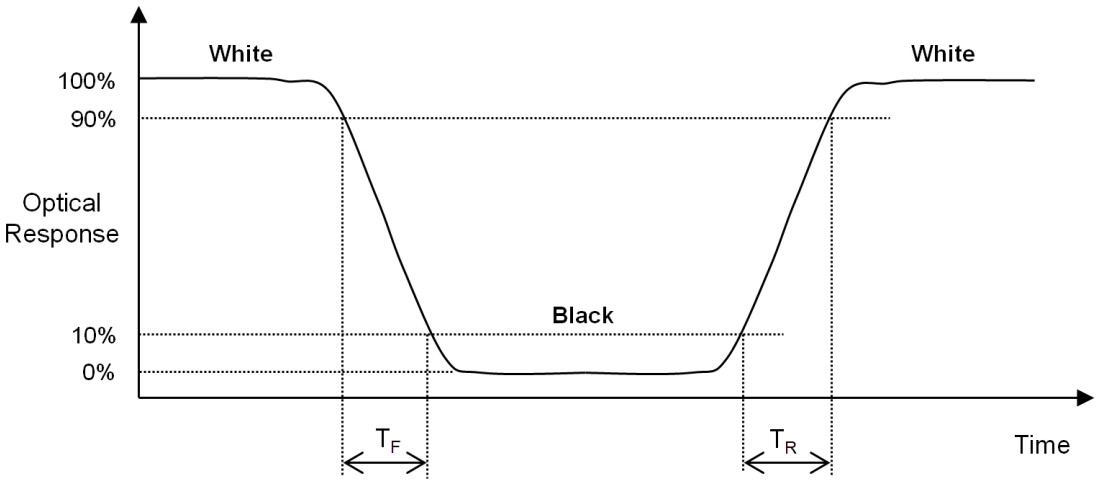

Note (4) Definition of Luminance of White (L_C):

Measure the luminance of White at center point.

Note (5) Measurement Setup:

The LCD module should be stabilized at given temperature to avoid abrupt temperature change during measuring. In order to stabilize the luminance, the measurement should be executed after lighting Backlight for 40 minutes in a windless room. The measurement placement of module should be in accordance with module drawing.

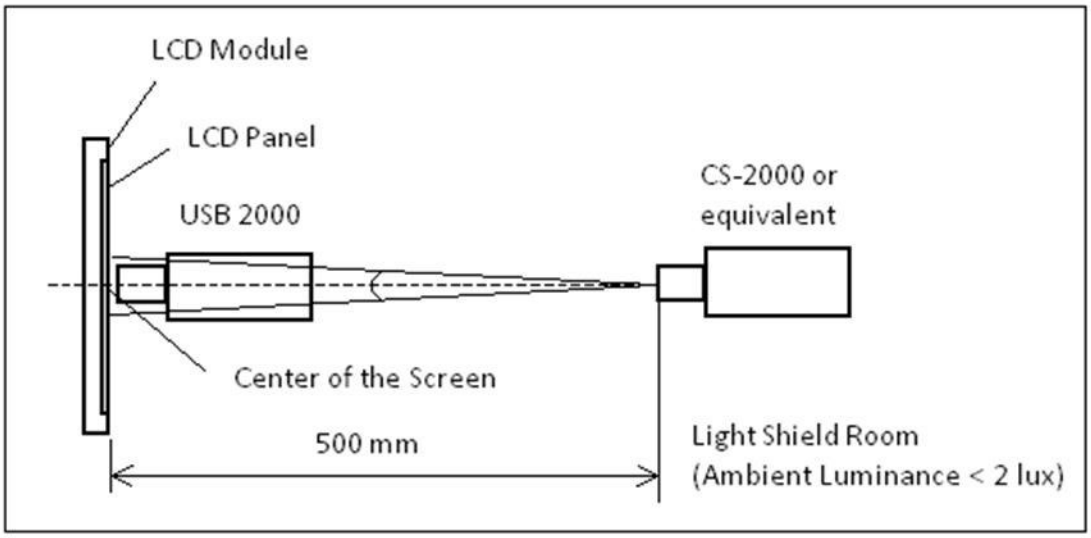

Note (6) Definition of White Variation (δW):

Measure the luminance of White at 9 points.

Luminance of White : L(X) , where X is from 1 to 9.

$$\delta W = \frac{\text{Minimum } [\, L(1) \text{ to } L(9)]}{\text{Maximum } [\, L(1) \text{ to } L(9)]} \times 100\%$$

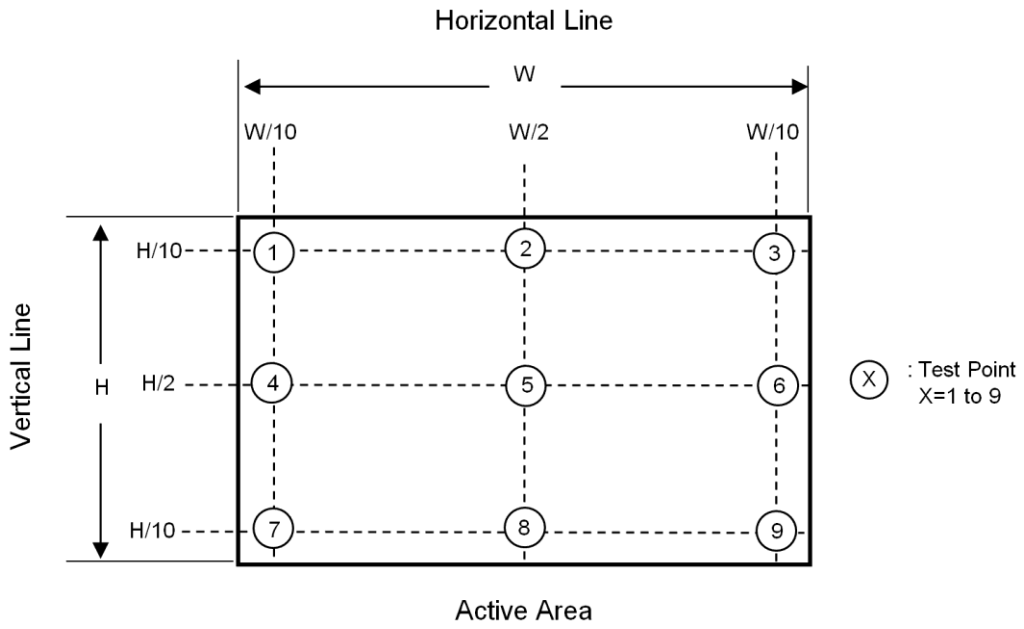

8. RELIABILITY TEST CRITERIA

Test Item	Test Condition	Note
High Temperature Storage Test	85℃, 240 hours	(1),(2) (4),(5)
Low Temperature Storage Test	-30℃, 240 hours	
Thermal Shock Storage Test	-30℃, 0.5 hour⟷85℃, 0.5 hour; 100cycles, 1 hour/cycle)	
High Temperature Operation Test	85℃, 240 hours	
Low Temperature Operation Test	-30℃, 240 hours	
High Temperature & High Humidity Operation Test	60℃, RH 90%, 240 hours	
ESD Test (Operation)	150pF, 330Ω, 1 sec/cycle Condition 1 : panel contact, ±8 KV Condition 2 : panel non-contact ±15 KV	(1), (4)
Shock (Non-Operating)	200G, 2ms, half sine wave, 1 time for ± X, ± Y, ± Z direction	(2), (3)
Vibration (Non-Operating)	1.5G, 10 ~ 300 Hz sine wave, 10 min/cycle, 3 cycles each X, Y, Z direction	

Note (1)There should be no condensation on the surface of panel during test ,

Note (2) Temperature of panel display surface area should be 80ºC Max.

Note (3) At testing Vibration and Shock, the fixture in holding the module has to be hard and rigid enough so that the module would not be twisted or bent by the fixture.

Note (4) In the standard conditions, there is no function failure issue occurred. All the cosmetic specification is judged before reliability test.

Note (5) Before cosmetic and function test, the product must have enough recovery time, at least 24 hours at room temperature.

9. PACKAGING

9.1 PACKING SPECIFICATIONS

(1) 18pcs LCD modules / 1 Box

(2) Box dimensions: 465 (L) X 362 (W) X 314 (H) mm

(3) Weight: approximately 10.9Kg (18 modules per box)

9.2 PACKING METHOD

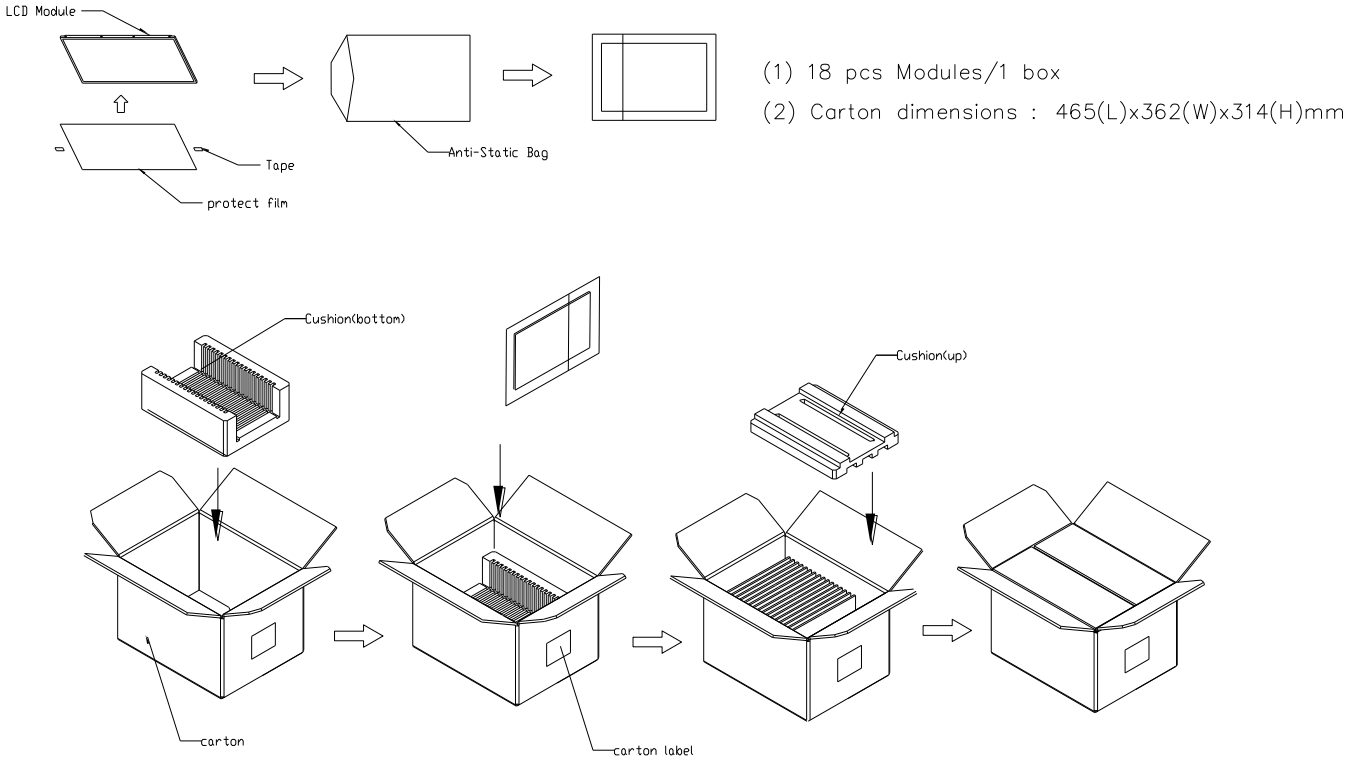

Figure. 9-1 Packing method

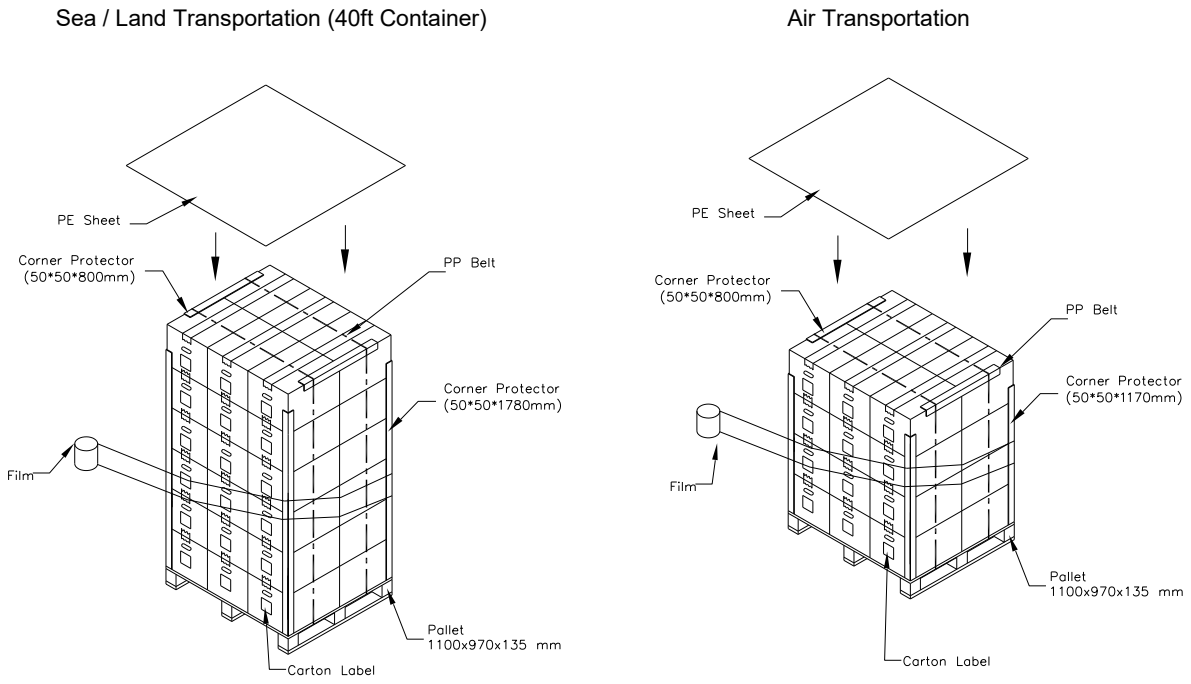

Figure. 9-2 Packing method

9.3 UN-PACKING METHOD

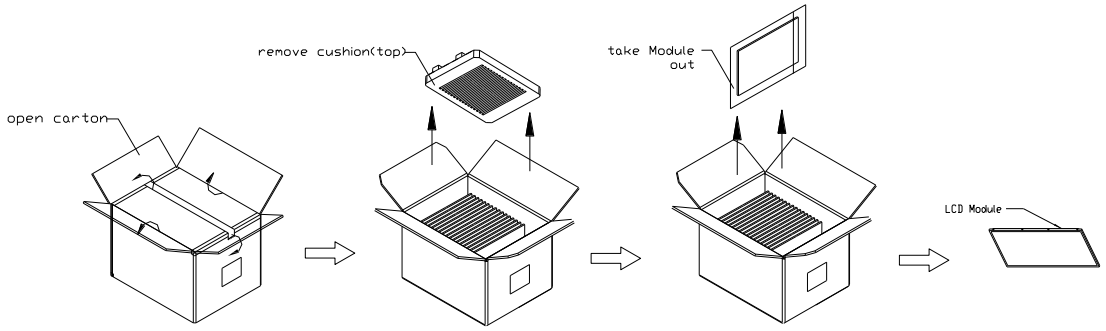

Figure. 9-3 UN-Packing method

10. DEFINITION OF LABELS

10.1 INX MODULE LABEL

The barcode nameplate is pasted on each module as illustration, and its definitions are as following explanation.

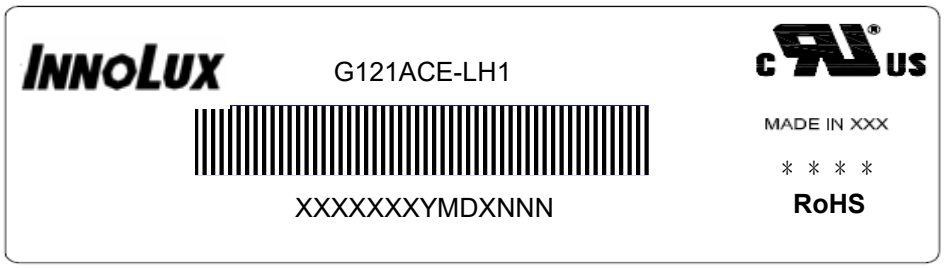

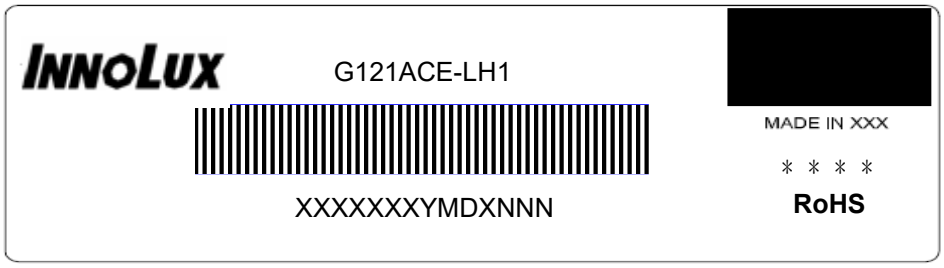

Note (1) Safety Compliance(UL logo) will open after C1 version.

(a) Model Name: G121ACE-LH1

(b) ＊＊＊＊ : Factory ID

(c) Serial ID: X X X X X X X Y M D X N N N N

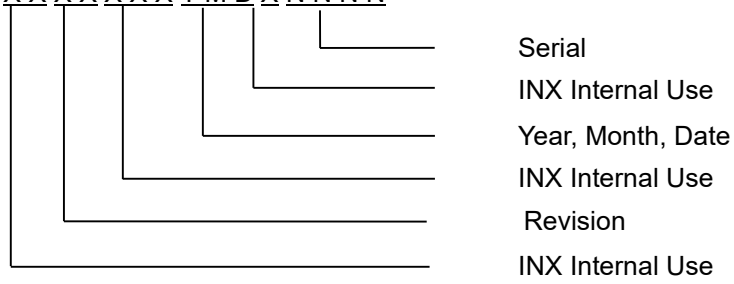

Serial ID includes the information as below:

(a) Manufactured Date: Year: 1~9, for 2021~2029

Month: 1~9, A~C, for Jan. ~ Dec.

Day: 1~9, A~Y, for 1st to 31st, exclude I , O and U

(b) Revision Code: cover all the change

(c) Serial No.: Manufacturing sequence of product

11. PRECAUTIONS

11.1 ASSEMBLY AND HANDLING PRECAUTIONS

(1) The module should be assembled into the system firmly by using every mounting hole. Be careful not to twist or bend the module.

(2) While assembling or installing modules, it can only be in the clean area. The dust and oil may cause electrical short or damage the polarizer.

(3) Use fingerstalls or soft gloves in order to keep display clean during the incoming inspection and assembly process.

(4) Do not press or scratch the surface harder than a HB pencil lead on the panel because the polarizer is very soft and easily scratched.

(5) If the surface of the polarizer is dirty, please clean it by some absorbent cotton or soft cloth. Do not use Ketone type materials (ex. Acetone), Ethyl alcohol, Toluene, Ethyl acid or Methyl chloride. It might permanently damage the polarizer due to chemical reaction.

(6) Wipe off water droplets or oil immediately. Staining and discoloration may occur if they left on panel for a long time.

(7) If the liquid crystal material leaks from the panel, it should be kept away from the eyes or mouth. In case of contacting with hands, legs or clothes, it must be washed away thoroughly with soap.

(8) Protect the module from static electricity, it may cause damage to the C-MOS Gate Array IC.

(9) Do not disassemble the module.

(10) Do not pull or fold the lamp wire.

(11) Pins of I/F connector should not be touched directly with bare hands.

11.2 STORAGE PRECAUTIONS

(1)When storing for a long time, the following precautions are necessary.

(a) Store them in a dark place. Do not expose the module to sunlight or fluorescent light. Keep the temperature between 5°C and 30°C at humidity 50+-10%RH.

(b) The polarizer surface should not come in contact with any other object.

(c) It is recommended that they be stored in the container in which they were shipped.

(d) Storage condition is guaranteed under packing conditions.

(e) The phase transition of Liquid Crystal in the condition of the low or high storage temperature will be recovered when the LCD module returns to the normal condition

(2) High temperature or humidity may reduce the performance of module. Please store LCD module within the specified storage conditions.

(3) It is dangerous that moisture come into or contacted the LCD module, because the moisture may damage LCD module when it is operating.

(4) It may reduce the display quality if the ambient temperature is lower than 10 ºC. For example, the response time will become slowly, and the starting voltage of lamp will be higher than the room temperature.

11.3 OTHER PRECAUTIONS

(1) Normal operating condition

(a) Display pattern: dynamic pattern (Real display)

(Note) Long-term static display can cause image sticking.

(2) Abnormal condition just means conditions except normal condition.

12. MECHANICAL CHARACTERISTICS

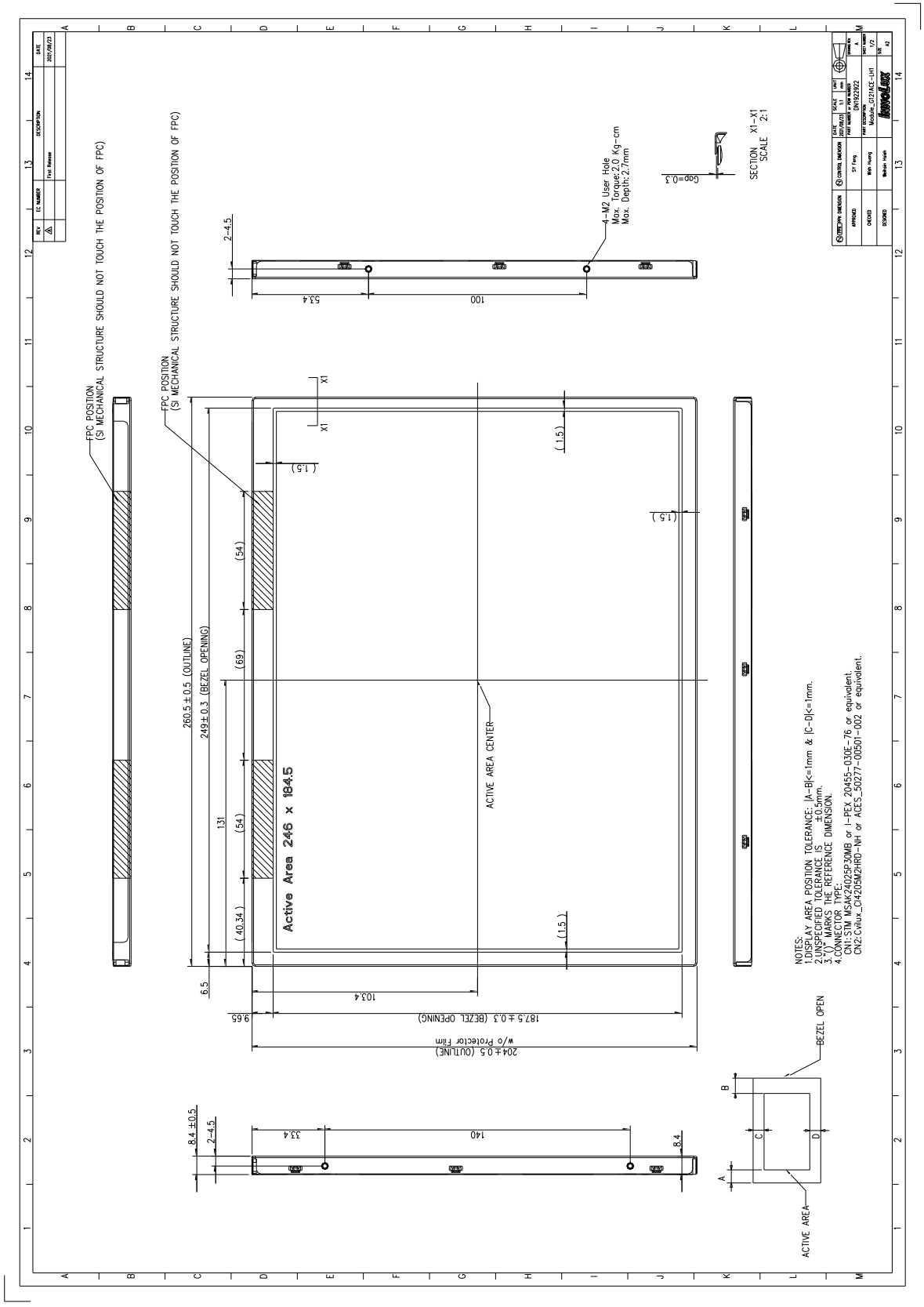

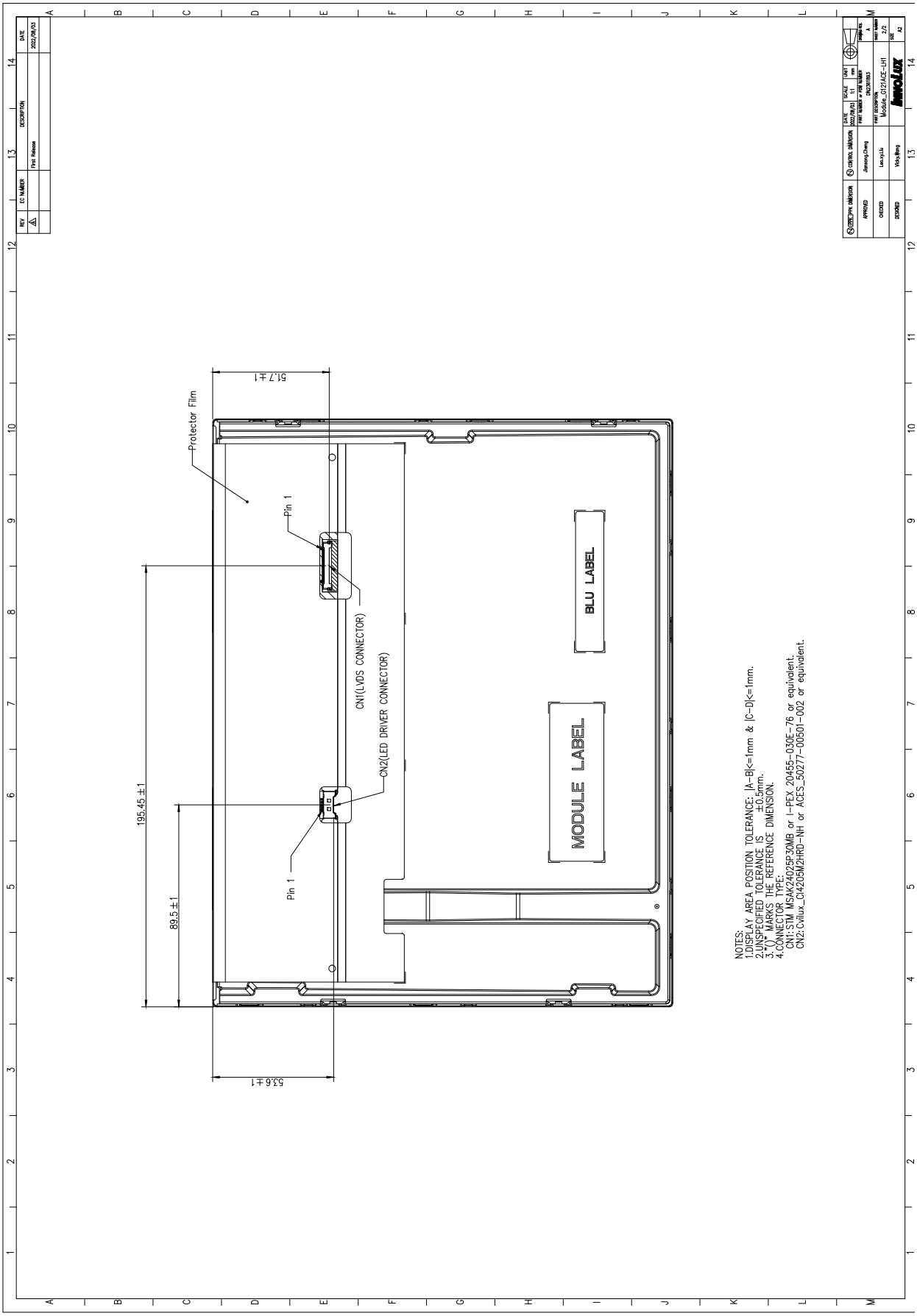

Appendix. SYSTEM COVER DESIGN NOTICE

1	Set Chassis and IAVM Module touching Mode
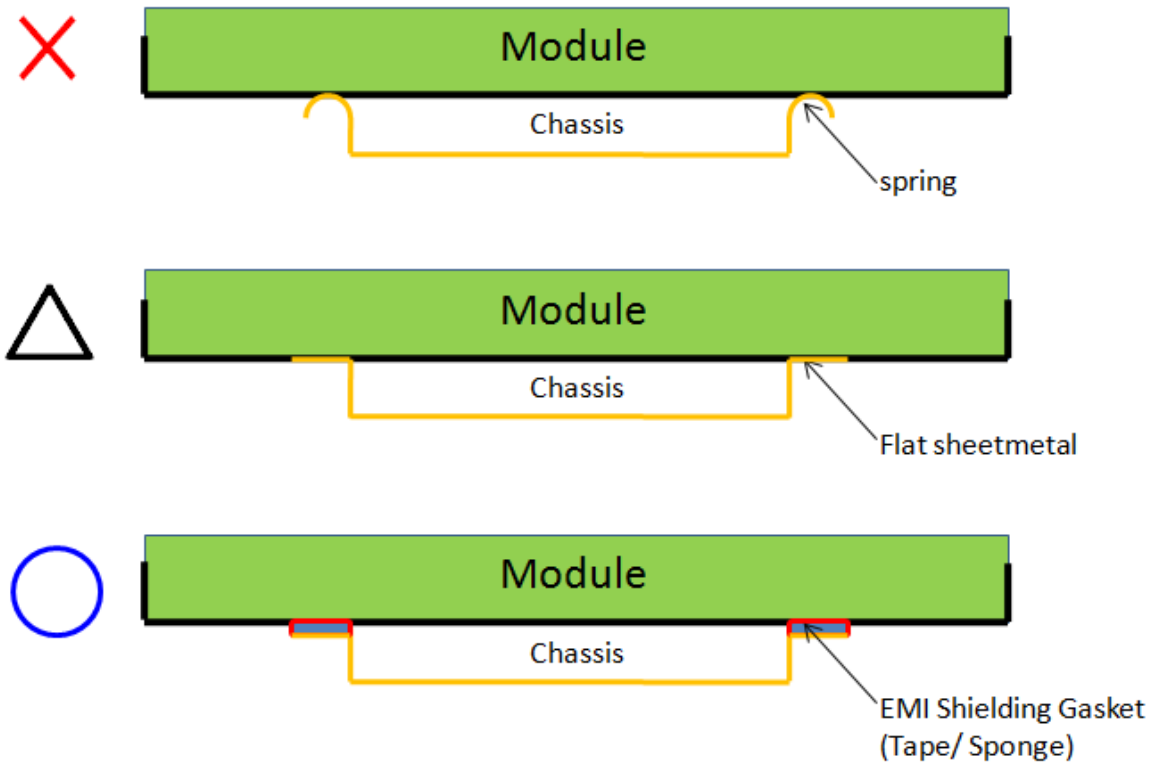	
Definition	a. To prevent from abnormal display & white spot after mechanical test, it is not recommended to use spring type chassis. b. We suggest the contact mode between Chassis and Module rear cover is Tape/Sponge, second is Flat sheet metal type chassis.

2	Tape/Sponge design on system inner surface
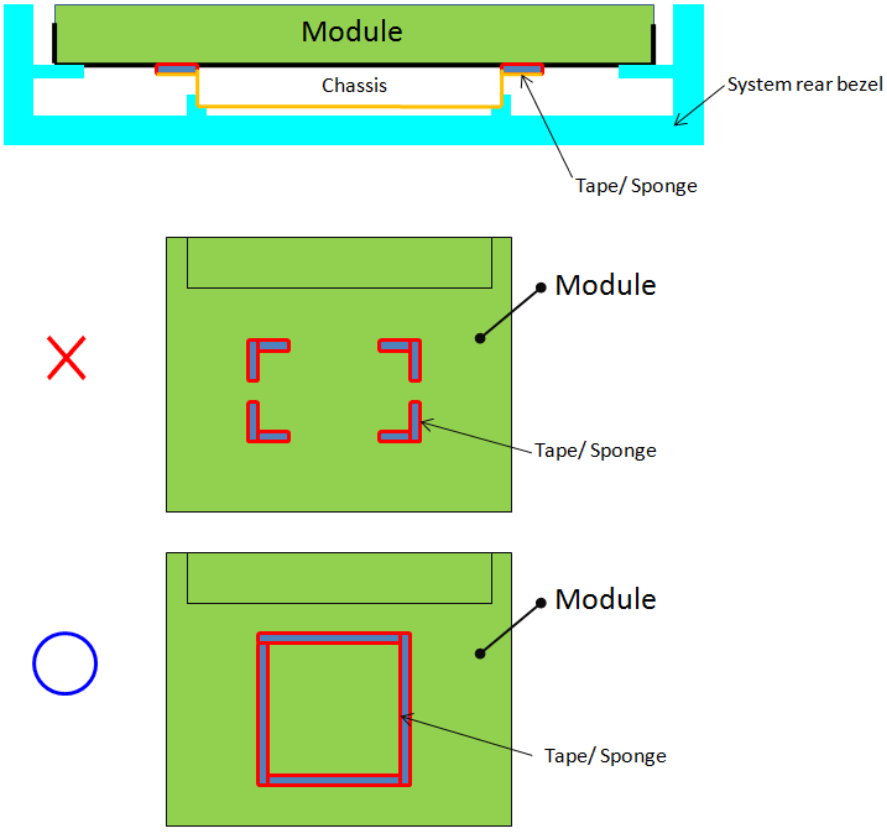	
Definition	a. To prevent from abnormal display & white spot after mechanical test, we suggest using Tape/Sponge as medium between chassis and Module rear cover could reduce the occurrence of white spot. b. When using the Tape/Sponge, we suggest it be lay over between set chassis and Module rear cover. It is not recommended to add Tape/Sponge in separate location. Since each Tape/Sponge may act as pressure concentration location.

3	System inner surface examination
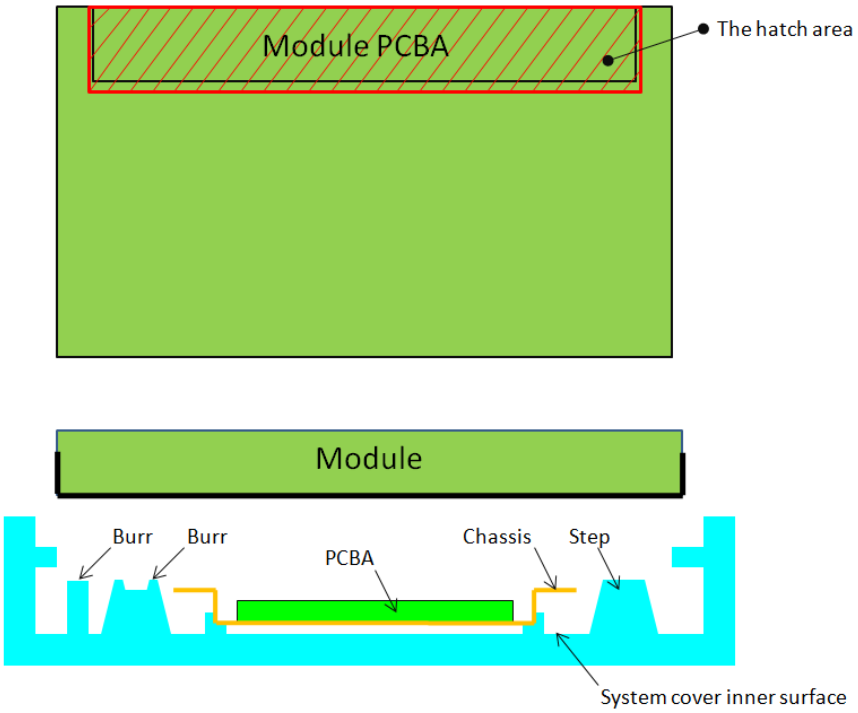	
Definition	a. The hatch area on Module PCBA should keep at least 1mm gap(X,Y,Z direction) to any structure with system cover inner surface. b. Burr, Step, PCB protrusion may cause stress concentration. White spot may occur during reliability test.

4	Material used for system rear-cover
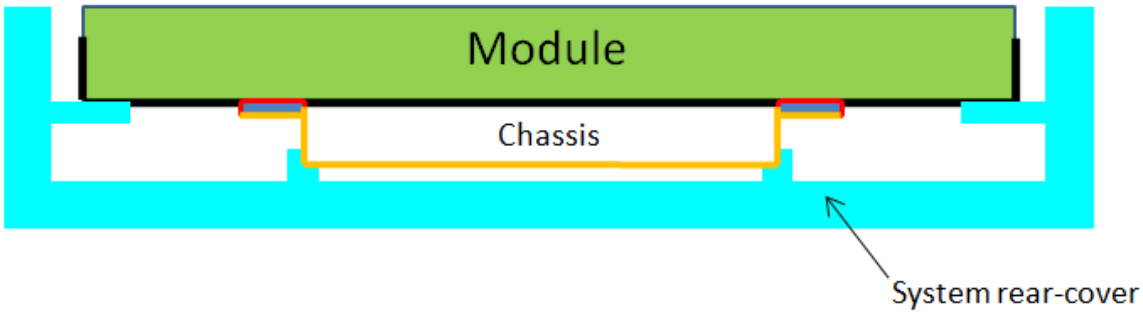	
Definition	System rear-cover material with high rigidity is needed to resist deformation during scuffing test, hinge test, pogo test or backpack test. Abnormal display, white spot, pooling issue may occur if low rigidity material is used. Pooling issue may occur because screw's boss position for module's bracket are deformed open-close test. Solid structure design of system rear-cover may also influence the rigidity of system rear-cover. The deformation of system rear-cover should not caused interference.

5	Assembly SOP examination for system front-cover with hook structure
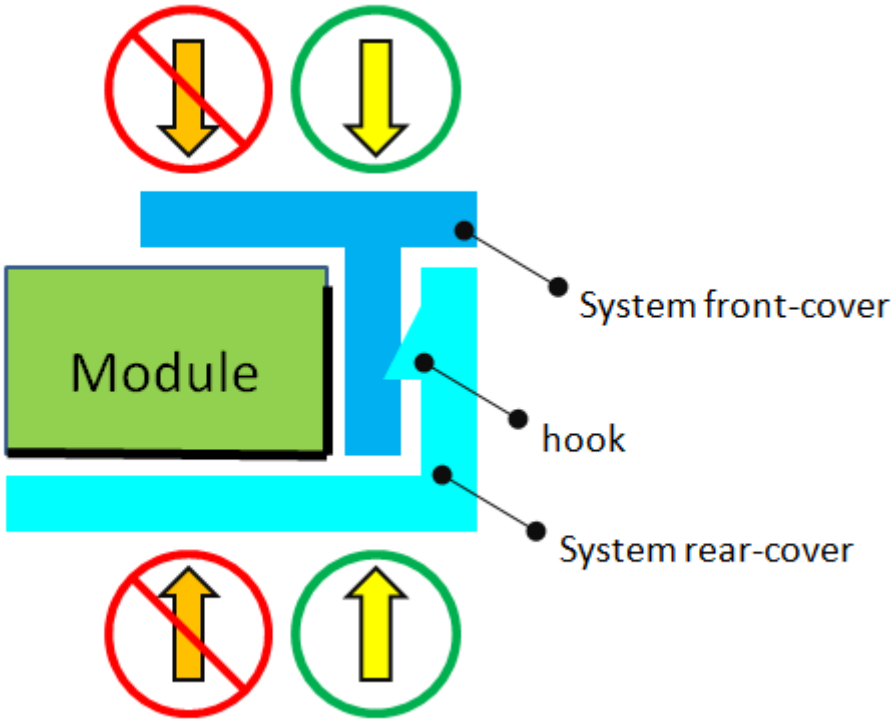	
Definition	To prevent panel crack during system front-cover assembly process with hook structure, it is not recommended to press panel or any location that relate directly to the panel.

6	Permanent deformation of system cover after reliability test
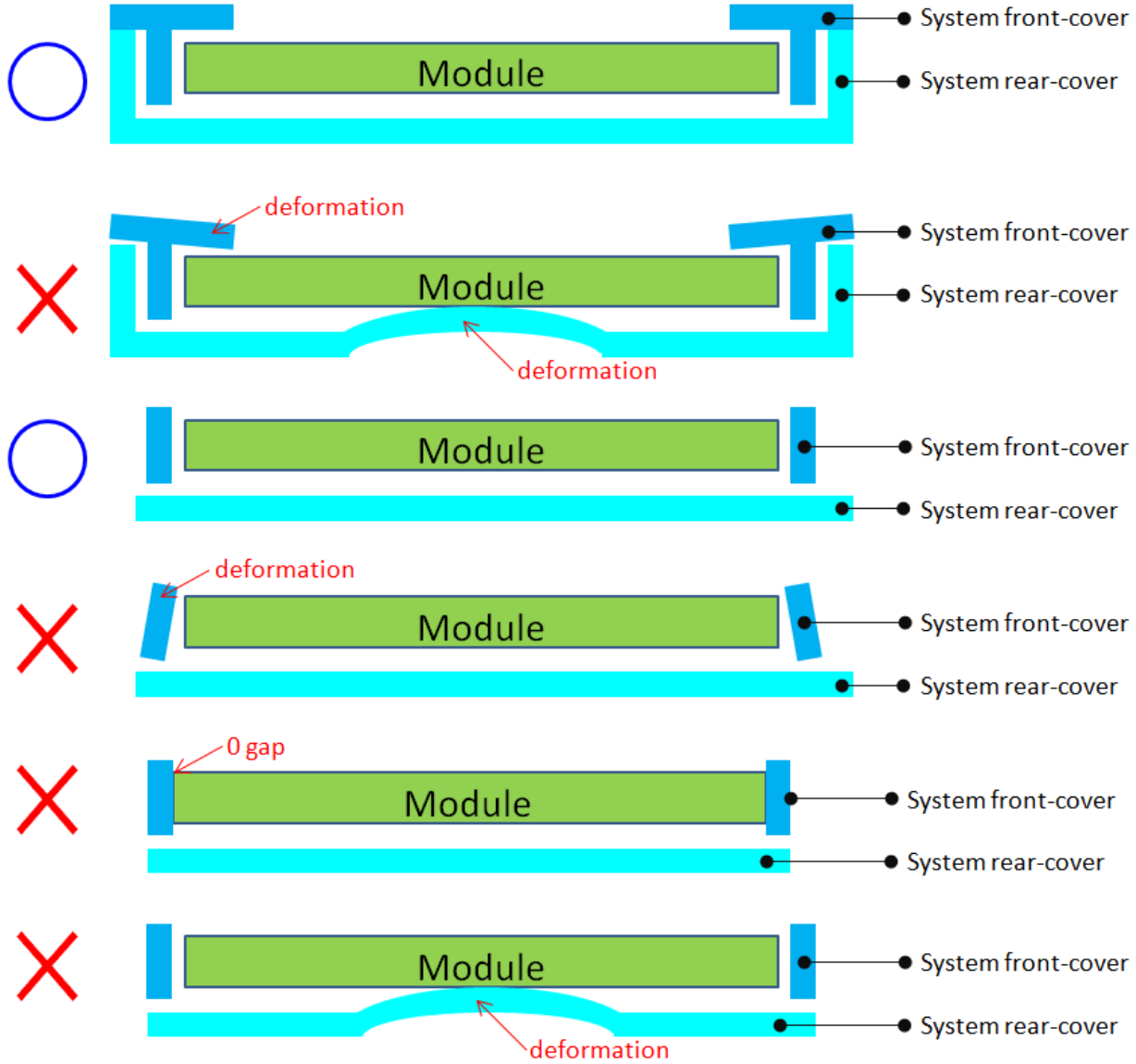	
Definition	System cover including front cover and rear cover may deform during reliability test. Permanent deformation of system front cover and rear cover after reliability test should not interfere with panel. Because it may cause issue such as pooling, abnormal display, white spot and also cell creak. Note: If the interference cannot be avoided, please feel free to contract INX FAE Engineer for collaboration design. We can help to verify and pass risk assessment for customer reference.

7	Design gap A between panel & any components on system rear-cover
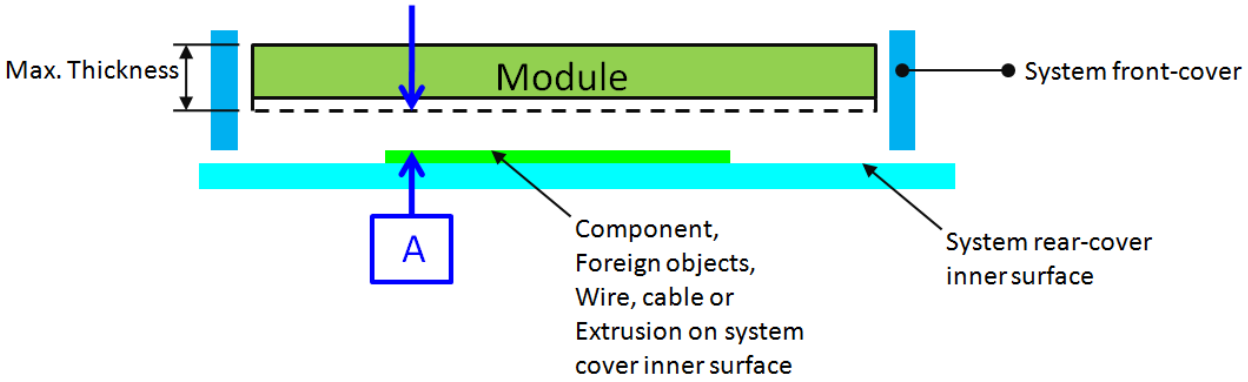	
Definition	System cover including front cover and rear cover may deform during reliability test. Permanent deformation of system front cover and rear cover after reliability test should not interfere with panel. Because it may cause issue such as pooling, abnormal display, white spot and also cell creak. Note: If the interference cannot be avoided, please feel free to contract INX FAE Engineer for collaboration design. We can help to verify and pass risk assessment for customer reference.

8	Design gap B between system front-cover & panel surface
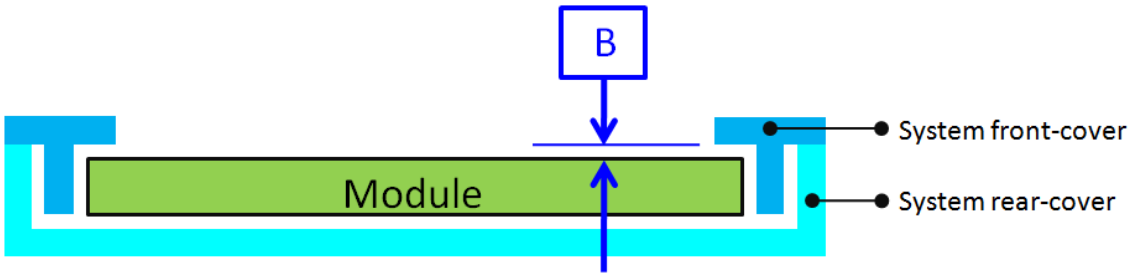	
Definition	Gap between system front-cover & panel surface is needed to prevent pooling or glass broken. Zero gap or interference such as burr and warpage from mold frame may cause pooling issue near system front-cover opening edge. This phenomenon is obvious during swing test, hinge test, knock test or during pooling inspection procedure. To remain sufficient gap, design with system rib higher than maximum panel thickness is recommended. Note: If the interference cannot be avoided, please feel free to contract INX FAE Engineer for collaboration design. We can help to verify and pass risk assessment for customer reference.

9	Design gap C between panel & system front-cover or protrusions
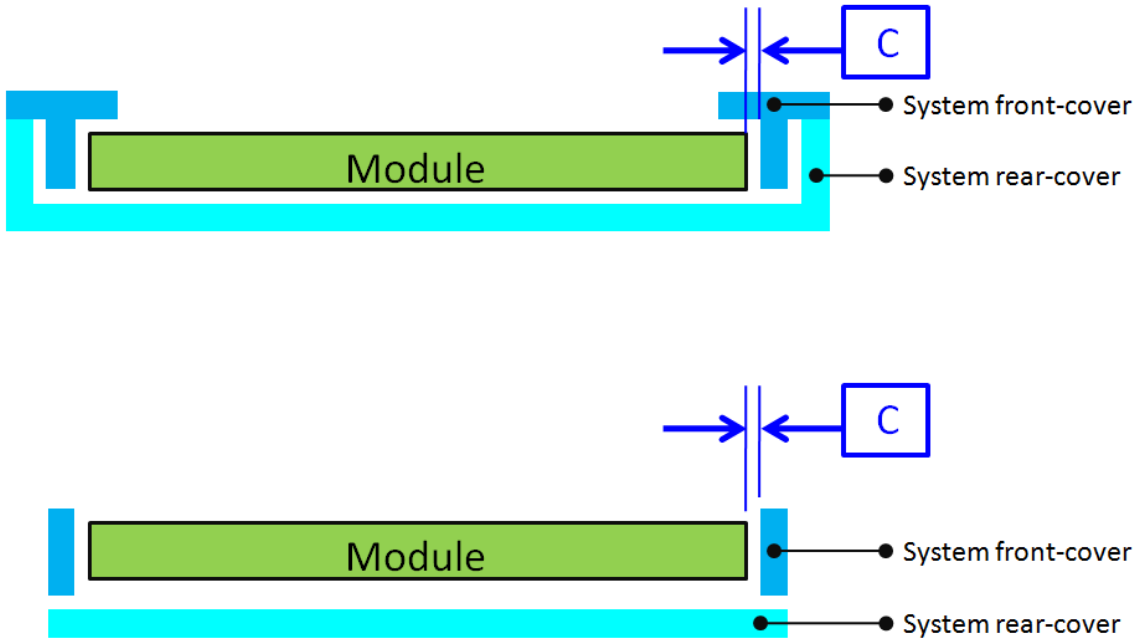	
Definition	Gap between panel & system front-cover or protrusions is needed to prevent shock test failure. Because system front-cover or protrusions with small gap may hit panel during the test. Issue such as cell crack, abnormal display may occur. The gap should be large enough to absorb the maximum displacement during the test. Note: If the interference cannot be avoided, please feel free to contract INX FAE Engineer for collaboration design. We can help to verify and pass risk assessment for customer reference.

10	Design distance between TP AA to LCD AA
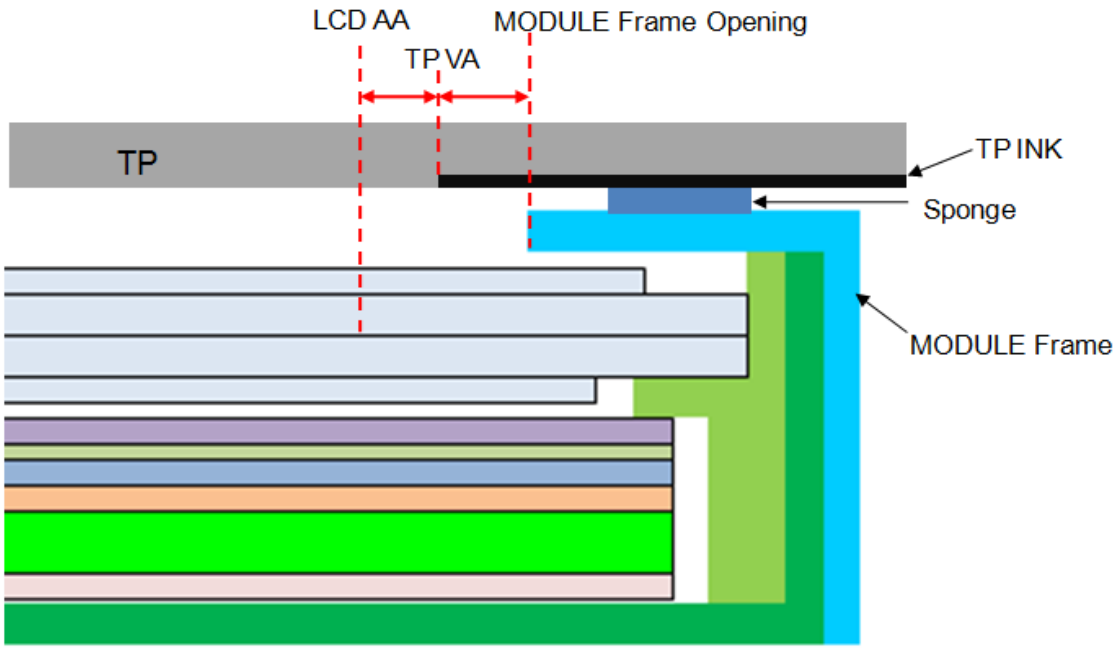	
Definition	TP VA should avoid TP ink area covering LCD AA or causing the module frame to be exposed.

11	Use OCR Lamination
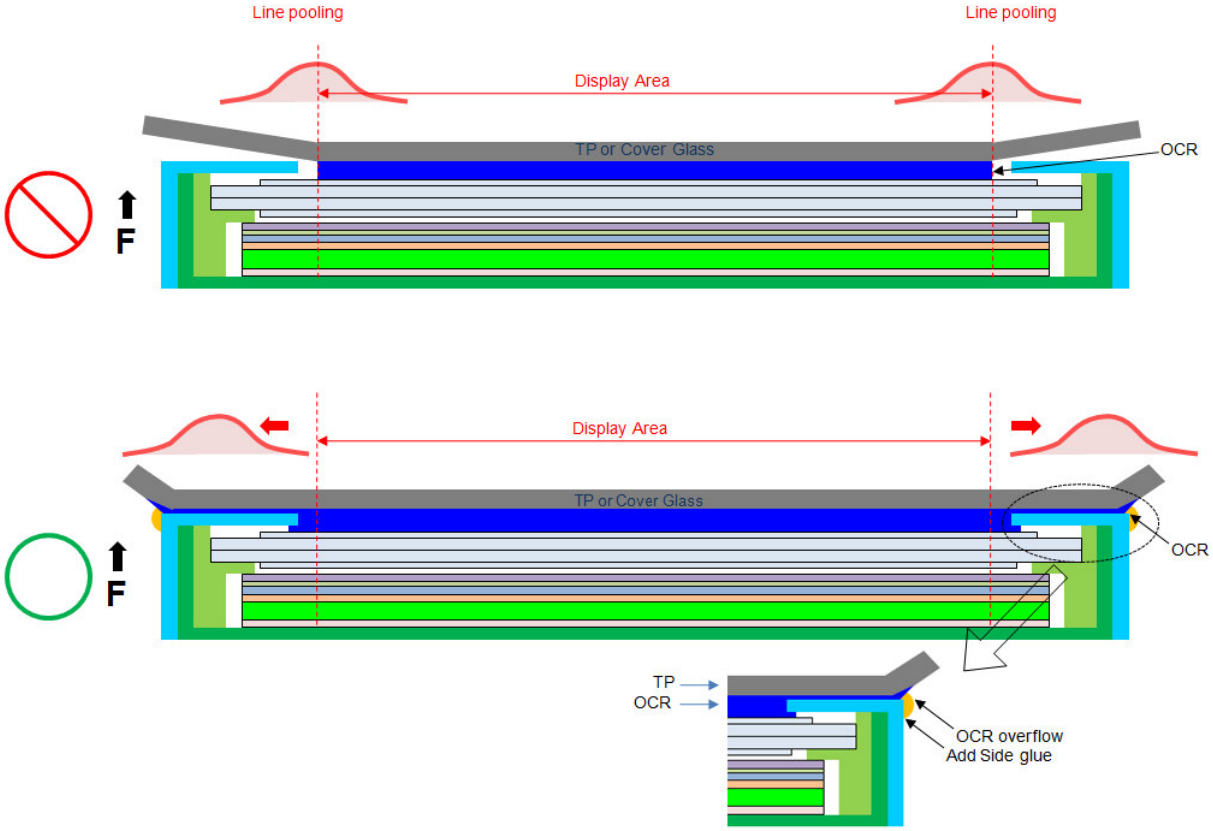	
Definition	1.OCR glue as possible beyond module, in order to avoid Line Pooling 2.Add side glue to avoid Line Pooling

DATA MODUL

ALL TECHNOLOGIES. ALL COMPETENCIES. ONE SPECIALIST.

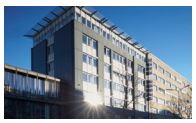

DATA MODUL AG

Landsberger Straße 322 DE-
80687 Munich
Phone: +49-89-56017-0

DATA MODUL WEIKERSHEIM GMBH

Lindenstraße 8
DE-97990 Weikersheim Phone:
+49-7934-101-0

More information and worldwide locations can be found at

www.data-modul.com