DATA MODUL

HannStar

Specification

HSD123JPW3-A10

12.3" - 1920 x 720 – LVDS

Spec Revision: 2.0
Revision Date: 07.11.2024

Note: This specification is subject to change without prior notice

Passion Displayed

TO : DATA MODUL

Date : Nov.07.2024

HannStar Product Information

(Formal)

Model: HSD123JPW3-A10

Note: 1.Please contact HannStar Display Corp. before designing your product based on this module specification.
2.The information contained herein is presented merely to indicate the characteristics and performance of our products. No responsibility is assumed by HannStar for any intellectual property claims or other problems that may result from application based on the module described herein.
3.The mark “ ** ” of Model means sub-model code.

The information contained in this document is the exclusive property of HannStar Display Corporation. It shall not be disclosed, distributed or reproduced in whole or in part without written permission of HannStar Display Corporation.

Record of Revisions

Rev.	Date	Sub-Model	Description of change
1.0	Sep.15.2021	A10	Formal Product Specification was first released.
2.0	Aug.13.2024	A10	Modify the interface note2 Temperature vs Resistance Table (P14) Modify 8.0 outline dimension

The information contained in this document is the exclusive property of HannStar Display Corporation. It shall not be disclosed, distributed or reproduced in whole or in part without written permission of HannStar Display Corporation.

Contents

1.0 GENERAL DESCRIPTION 4

2.0 ABSOLUTE MAXIMUM RATINGS 5

3.0 OPTICAL CHARACTERISTICS 6

4.0 BLOCK DIAGRAM 10

5.0 INTERFACE PIN CONNECTION 12

6.0 ELECTRICAL CHARACTERISTICS 15

7.0 RELIABILITY TEST ITEMS 20

8.0 OUTLINE DIMENSION 21

9.0 LOT MARK 22

10.0 PACKAGE SPECIFICATION 23

11.0 GENERAL PRECAUTION 26

The information contained in this document is the exclusive property of HannStar Display Corporation. It shall not be disclosed, distributed or reproduced in whole or in part without written permission of HannStar Display Corporation.

1.0 GENERAL DESCRIPTION

1.1 Introduction

HannStar Display model HSD123JPW3-A10 is a color active matrix thin film transistor (TFT) liquid crystal display (LCD) that uses amorphous silicon TFT as a switching device. This model is composed of a TFT LCD panel, a driving circuit and a back light system. This TFT LCD has a 12.28” (8:3) inch diagonally measured active display area with 5760 x 720 dot (1920 horizontal by 720 vertical pixel) resolution.

1.2 Features

- 12.28 (8:3 diagonal) inch configuration
- 16.7M
- ROHS / Halogen Free Compliance

1.3 Applications

- TFT LCD Monitor
- Industrial Application
- Amusement
- Vehicle

1.4 General information

Item		Specification	Unit
Outline Dimension		302.0(H) x 125.4(V) x6.2(Typ.)	mm
Display area		292.032(H) x 109.512(V)	mm
Number of Pixel		1920 RGB (H) x 720(V)	pixels
Pixel pitch		0.1521(H) x 0.1521 (V)	mm
Pixel arrangement		RGB Vertical stripe	
Display mode		Normally Black	
NTSC		75 (typ.)	%
Surface treatment		HC (Glare)	
Weight		345 (Typ.)	g
Back-light		Single LED (Side-Light type)	
Power Consumption	Logic System (White Pattern)	(1.32 W) (Max.)	W
	B/L System	(11.968 W) (Max.)	W

1.5 Mechanical Information

Item		Min.	Typ.	Max.	Unit
Module Size	Horizontal (H)	301.5	302.0	302.5	mm
	Vertical (V)	124.9	125.4	125.9	mm
	Depth (D)	5.9	6.2	6.5	mm
Weight		–	345	378	g

The information contained in this document is the exclusive property of HannStar Display Corporation. It shall not be disclosed, distributed or reproduced in whole or in part without written permission of HannStar Display Corporation.

2.0 ABSOLUTE MAXIMUM RATINGS

2.1 Electrical Absolute Rating

2.1.1 TFT LCD Module

Parameters	Symbol	Min.	Max.	Unit	Note
Power Logic	VCC	-0.3	3.6	V	

2.2 Environment Absolute Rating

Item	Symbol	Min.	Max.	Unit	Note
Operating Temperature	T_{opa}	-30	85	℃	
Storage Temperature	T_{stg}	-40	90	℃	

The information contained in this document is the exclusive property of HannStar Display Corporation. It shall not be disclosed, distributed or reproduced in whole or in part without written permission of HannStar Display Corporation.

3.0 OPTICAL CHARACTERISTICS

3.1 Optical specification

Item		Symbol	Condition	Min.	Typ.	Max.	Unit	Note
Contrast		CR	Θ=0 Normal viewing angle	1100	1500	—		(1)(2)
Response time	25°C	T_R+T_F		—	25	30	msec	(1)(3)
	-20°C	T_R+T_F		—	170	250		
	-30°C	T_R+T_F		—	400	450		
White luminance (Center)		Y_L		650	850	—	cd/m²	(1)(4) (I_L=320mA)
Color chromaticity (CIE1931)	White	W_x		(0.256)	(0.296)	(0.336)		(1)(4)
		W_y		(0.269)	(0.309)	(0.349)		
	Red	R_x		(0.591)	(0.631)	(0.671)		
		R_y		(0.282)	(0.322)	(0.362)		
	Green	G_x		(0.263)	(0.303)	(0.343)		
		G_y		(0.593)	(0.633)	(0.673)		
	Blue	B_x		(0.120)	(0.160)	(0.200)		
		B_y		(0.004)	(0.044)	(0.084)		
Viewing angle	Hor.	Θ_L	CR>10	80	85	—		
		Θ_R		80	85	—		
	Ver.	Θ_U		80	85	—		
		Θ_D		80	85	—		
Brightness uniformity		B_{UNI}	Θ=0	70	80	—	%	(5)
Optima View Direction		Free						(6)

3.2 Measuring Condition

- Measuring surrounding：dark room
- LED current I_L：(320mA)
- Ambient temperature：25±2°C
- 15min. warm-up time.

The information contained in this document is the exclusive property of HannStar Display Corporation. It shall not be disclosed, distributed or reproduced in whole or in part without written permission of HannStar Display Corporation.

3.3 Measuring Equipment

- FPM520 of Westar Display technologies, INC., which utilized SR-3 for Chromaticity and BM-5A for other optical characteristics.
- Measuring spot size：20 ~ 21 mm

Note (1) Definition of Viewing Angle:

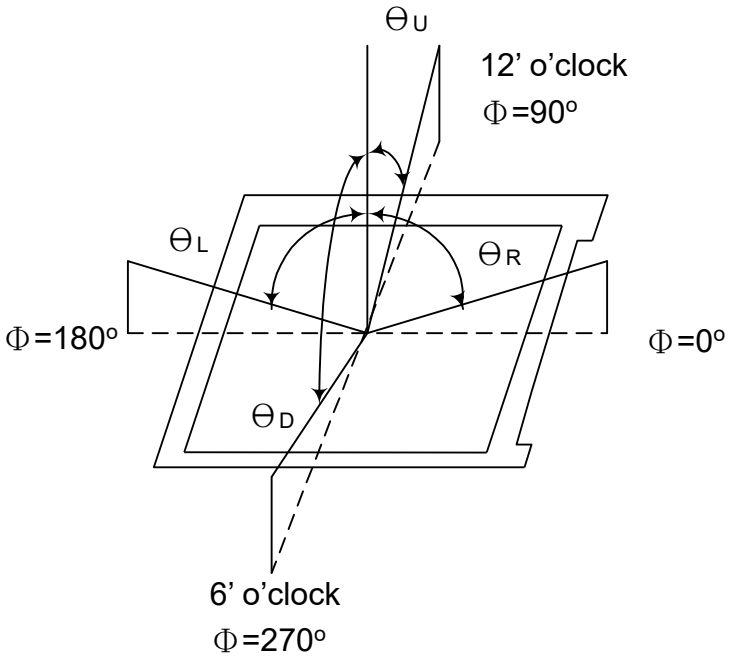

Note (2) Definition of Contrast Ratio (CR) :
measured at the center point of panel

$$CR = \frac{\text{Luminance with all pixels white}}{\text{Luminance with all pixels black}}$$

The information contained in this document is the exclusive property of HannStar Display Corporation. It shall not be disclosed, distributed or reproduced in whole or in part without written permission of HannStar Display Corporation.

Note (3) Definition of Response Time : Sum of T_R and T_F

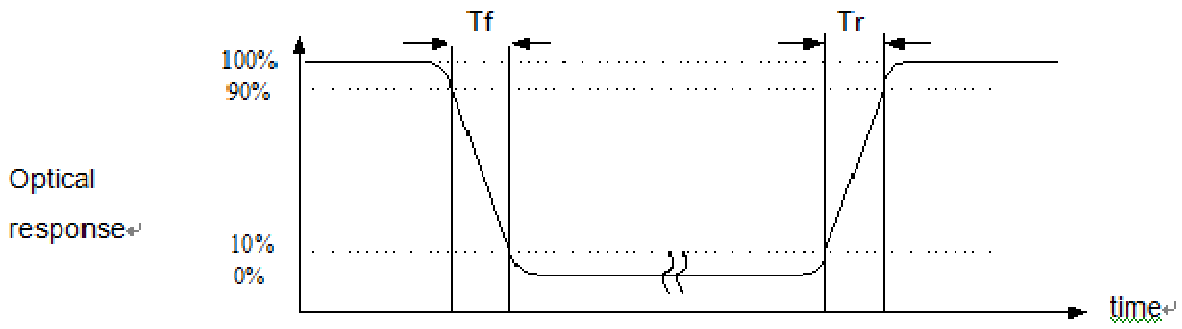

Note (4) Definition of optical measurement setup

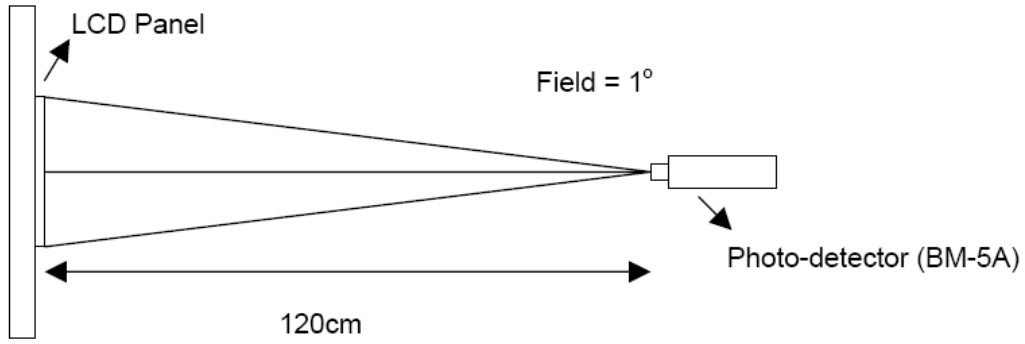

The information contained in this document is the exclusive property of HannStar Display Corporation. It shall not be disclosed, distributed or reproduced in whole or in part without written permission of HannStar Display Corporation.

Note (5) Definition of brightness uniformity

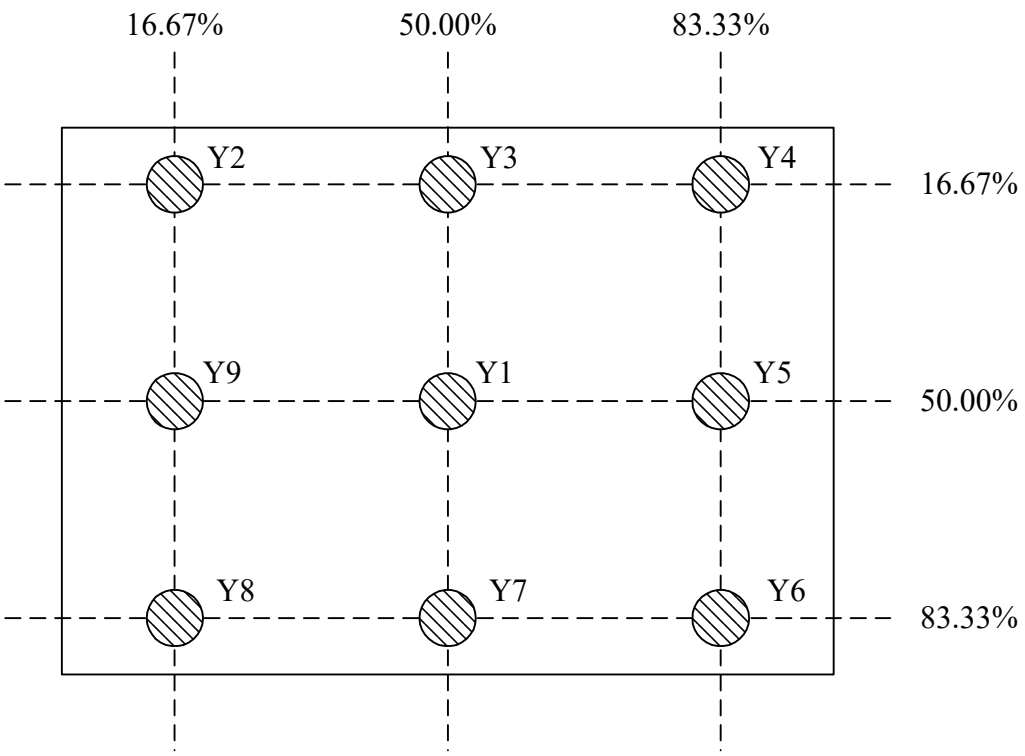

$$\text{Luminance uniformity} = \frac{\text{(Min Luminance of 9 points)}}{\text{(Max Luminance of 9 points)}} \times 100\%$$

Note (6)：Rubbing Direction (The different Rubbing Direction will cause the different optima view direction.

The information contained in this document is the exclusive property of HannStar Display Corporation. It shall not be disclosed, distributed or reproduced in whole or in part without written permission of HannStar Display Corporation.

4.0 BLOCK DIAGRAM

4.1 TFT LCD Module:

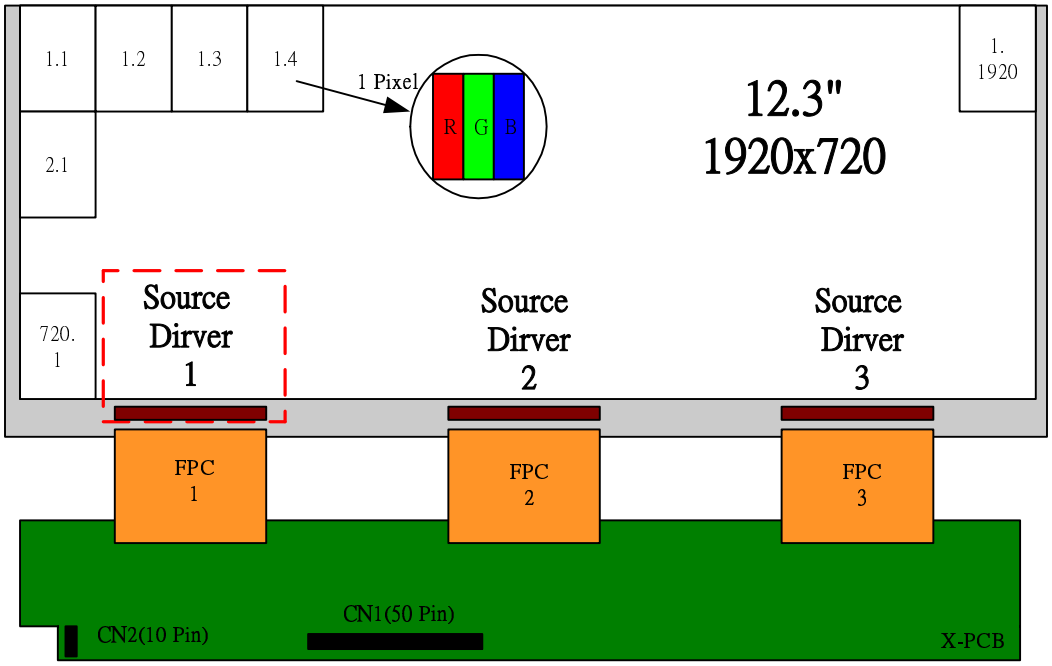

4.2 Pixel Format

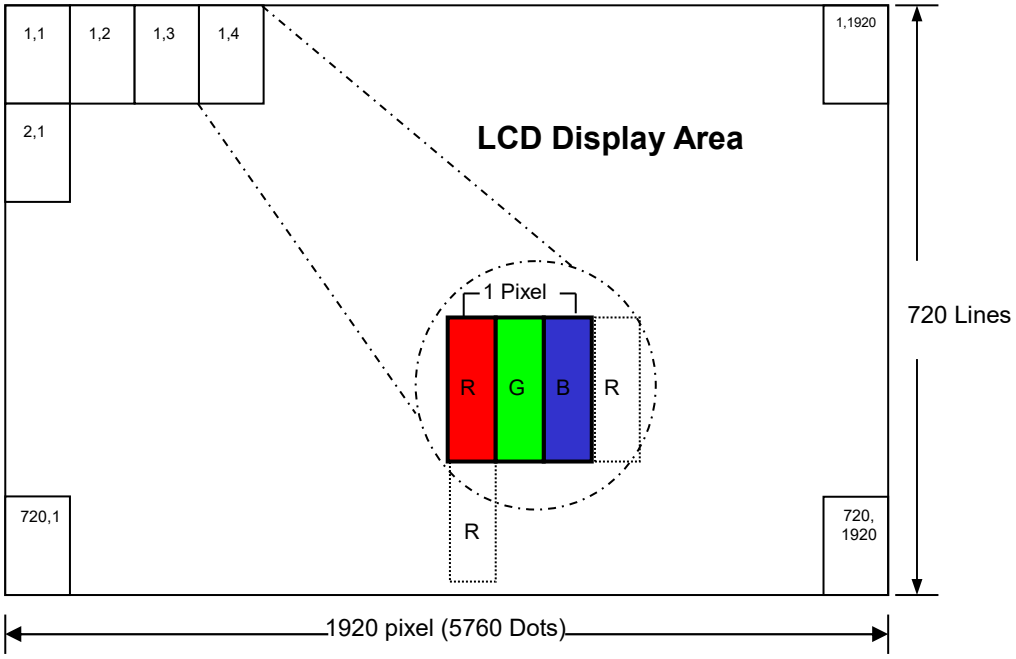

The information contained in this document is the exclusive property of HannStar Display Corporation. It shall not be disclosed, distributed or reproduced in whole or in part without written permission of HannStar Display Corporation.

4.3 Relationship Between Displayed Color and Input

	Display	MSB R7	R6	R5	R4	R3	R2	R1	LSB R0	MSB G7	G6	G5	G4	G3	G2	G1	LSB G0	MSB B7	B6	B5	B4	B3	B2	B1	LSB B0	Gray scale Level
Basic color	Black	L	L	L	L	L	L	L	L	L	L	L	L	L	L	L	L	L	L	L	L	L	L	L	L	-
	Blue	L	L	L	L	L	L	L	L	L	L	L	L	L	L	L	L	H	H	H	H	H	H	H	H	-
	Green	L	L	L	L	L	L	L	L	H	H	H	H	H	H	H	H	L	L	L	L	L	L	L	L	-
	Light Blue	L	L	L	L	L	L	L	L	H	H	H	H	H	H	H	H	H	H	H	H	H	H	H	H	-
	Red	H	H	H	H	H	H	H	H	L	L	L	L	L	L	L	L	L	L	L	L	L	L	L	L	-
	Purple	H	H	H	H	H	H	H	H	L	L	L	L	L	L	L	L	H	H	H	H	H	H	H	H	-
	Yellow	H	H	H	H	H	H	H	H	H	H	H	H	H	H	H	H	L	L	L	L	L	L	L	L	-
	White	H	H	H	H	H	H	H	H	H	H	H	H	H	H	H	H	H	H	H	H	H	H	H	H	-
Gray scale of Red	Black	L	L	L	L	L	L	L	L	L	L	L	L	L	L	L	L	L	L	L	L	L	L	L	L	L0
	Dark	L	L	L	L	L	L	L	H	L	L	L	L	L	L	L	L	L	L	L	L	L	L	L	L	L1
		L	L	L	L	L	L	H	L	L	L	L	L	L	L	L	L	L	L	L	L	L	L	L	L	L2
	↑					:							:								:					L3…L251
	↓	H	H	H	H	H	H	L	L	L	L	L	L	L	L	L	L	L	L	L	L	L	L	L	L	L252
	Light	H	H	H	H	H	H	L	H	L	L	L	L	L	L	L	L	L	L	L	L	L	L	L	L	L253
		H	H	H	H	H	H	H	L	L	L	L	L	L	L	L	L	L	L	L	L	L	L	L	L	L254
	Red	H	H	H	H	H	H	H	H	L	L	L	L	L	L	L	L	L	L	L	L	L	L	L	L	Red L255
Gray scale of Green	Black	L	L	L	L	L	L	L	L	L	L	L	L	L	L	L	L	L	L	L	L	L	L	L	L	L0
	Dark	L	L	L	L	L	L	L	L	L	L	L	L	L	L	L	H	L	L	L	L	L	L	L	L	L1
		L	L	L	L	L	L	L	L	L	L	L	L	L	L	H	L	L	L	L	L	L	L	L	L	L2
	↑					:							:								:					L3…L251
	↓	L	L	L	L	L	L	L	L	H	H	H	H	H	H	L	L	L	L	L	L	L	L	L	L	L252
	Light	L	L	L	L	L	L	L	L	H	H	H	H	H	H	L	H	L	L	L	L	L	L	L	L	L253
		L	L	L	L	L	L	L	L	H	H	H	H	H	H	H	L	L	L	L	L	L	L	L	L	L254
	Green	L	L	L	L	L	L	L	L	H	H	H	H	H	H	H	H	L	L	L	L	L	L	L	L	Green L255
Gray scale of Blue	Black	L	L	L	L	L	L	L	L	L	L	L	L	L	L	L	L	L	L	L	L	L	L	L	L	L0
	Dark	L	L	L	L	L	L	L	L	L	L	L	L	L	L	L	L	L	L	L	L	L	L	L	H	L1
		L	L	L	L	L	L	L	L	L	L	L	L	L	L	L	L	L	L	L	L	L	L	H	L	L2
	↑					:							:								:					L3…L251
	↓	L	L	L	L	L	L	L	L	L	L	L	L	L	L	L	L	H	H	H	H	H	H	L	L	L252
	Light	L	L	L	L	L	L	L	L	L	L	L	L	L	L	L	L	H	H	H	H	H	H	L	H	L253
		L	L	L	L	L	L	L	L	L	L	L	L	L	L	L	L	H	H	H	H	H	H	H	L	L254
	Blue	L	L	L	L	L	L	L	L	L	L	L	L	L	L	L	L	H	H	H	H	H	H	H	H	Blue L255
Gray scale of White & Black	Black	L	L	L	L	L	L	L	L	L	L	L	L	L	L	L	L	L	L	L	L	L	L	L	L	L0
	Dark	L	L	L	L	L	L	L	H	L	L	L	L	L	L	L	H	L	L	L	L	L	L	L	H	L1
		L	L	L	L	L	L	H	L	L	L	L	L	L	L	H	L	L	L	L	L	L	L	H	L	L2
	↑					:							:								:					L3…L251
	↓	H	H	H	H	H	H	L	L	H	H	H	H	H	H	L	L	H	H	H	H	H	H	L	L	L252
	Light	H	H	H	H	H	H	L	H	H	H	H	H	H	H	L	H	H	H	H	H	H	H	L	H	L253
		H	H	H	H	H	H	H	L	H	H	H	H	H	H	H	L	H	H	H	H	H	H	H	L	L254
	White	H	H	H	H	H	H	H	H	H	H	H	H	H	H	H	H	H	H	H	H	H	H	H	H	White L255

The information contained in this document is the exclusive property of HannStar Display Corporation. It shall not be disclosed, distributed or reproduced in whole or in part without written permission of HannStar Display Corporation.

5.0 INTERFACE PIN CONNECTION

CN1 FPC connector is used for electronics interface.

AORORA F31L-1A7H1-21050 or BJD-101049-205050, 50PIN

No.	Symbol	Function	Note
1	GND	Power ground	
2	NC/BIST	No connector(BIST Pin)	
3	VCC	Digital Power/Vin = 3.3V	
4	VCC	Digital Power/Vin = 3.3V	
5	GND	Power ground	
6	GND	Power ground	
7	NC	No connector(Serial interface OTP Power)	
8	NC	No connector	
9	GND	Power ground	
10	ORXIN0-	Negative LVDS differential data input (Odd data)	
11	ORXIN0+	Positive LVDS differential data input (Odd data)	
12	ORXIN1-	Negative LVDS differential data input (Odd data)	
13	ORXIN1+	Positive LVDS differential data input (Odd data)	
14	ORXIN2-	Negative LVDS differential data input (Odd data)	
15	ORXIN2+	Positive LVDS differential data input (Odd data)	
16	ORXCLKIN-	Negative LVDS differential clock input (Odd clock)	
17	ORXCLKIN+	Positive LVDS differential clock input (Odd clock)	
18	ORXIN3-	Negative LVDS differential data input (Odd data)	
19	ORXIN3+	Positive LVDS differential data input (Odd data)	
20	ERXIN0-	Negative LVDS differential data input (Even data)	
21	ERXIN0+	Positive LVDS differential data input (Even data)	
22	ERXIN1-	Negative LVDS differential data input (Even data)	
23	ERXIN1+	Positive LVDS differential data input (Even data)	
24	ERXIN2-	Negative LVDS differential data input (Even data)	
25	ERXIN2+	Positive LVDS differential data input (Even data)	
26	ERXCLKIN-	Negative LVDS differential clock input (Even clock)	
27	ERXCLKIN+	Positive LVDS differential clock input (Even clock)	
28	ERXIN3-	Negative LVDS differential data input (Even data)	
29	ERXIN3+	Positive LVDS differential data input (Even data)	
30	GND	Power ground	
31	FAULT	FAULT signal output(normal=H,abnormal=L)	note1
32	RESET	Global reset pin, active low.	
33	STBYB	Standby mode setting pin, active low.	

The information contained in this document is the exclusive property of HannStar Display Corporation. It shall not be disclosed, distributed or reproduced in whole or in part without written permission of HannStar Display Corporation.

34	NC	No connector(Serial interface chip enable.CSB)	
35	NC	No connector(Serial interface clock input.SCL)	
36	NC	No connector(Serial interface data input/output.CDA)	
37	NC	No connector(Serial interface data input/output.CDA)	
38	GND	Power ground	
39	GND	Power ground	
40	NC	No connector	
41	LEDA	LED power (Anode)	
42	LEDA	LED power (Anode)	
43	LEDA	LED power (Anode)	
44	NC	No connector	
45	LEDK	Cathode 1	
46	LEDK	Cathode 2	
47	LEDK	Cathode 3	
48	LEDK	Cathode 4	
49	NTC_A	NTC_Anode	note2
50	NTC_K	NTC_Cathode	note2
Note1: IC Enter self-protection mode. (No HS/VS/DE/CLK)[Lower than 40Hz]			

The information contained in this document is the exclusive property of HannStar Display Corporation. It shall not be disclosed, distributed or reproduced in whole or in part without written permission of HannStar Display Corporation.

Note2: Murata NCU15XH103F6SRC

Temperature vs Resistance Table：

TEMP. (deg.C)	R-low (kohm)	R-center (kohm)	R-high (kohm)	TEMP. (deg.C)	R-low (kohm)	R-center (kohm)	R-high (kohm)	TEMP. (deg.C)	R-low (kohm)	R-center (kohm)	R-high (kohm)	TEMP. (deg.C)	R-low (kohm)	R-center (kohm)	R-high (kohm)
-40	188.020	195.652	203.573	1	25.569	26.076	26.590	51	3.950	4.026	4.104	101	0.918	0.949	0.982
-39	177.804	184.917	192.295	2	24.512	24.988	25.470	52	3.821	3.896	3.973	102	0.895	0.925	0.957
-38	168.214	174.845	181.720	3	23.505	23.951	24.403	53	3.698	3.771	3.847	103	0.872	0.902	0.933
-37	159.207	165.391	171.798	4	22.545	22.963	23.386	54	3.578	3.651	3.725	104	0.850	0.880	0.910
-36	150.744	156.513	162.486	5	21.629	22.021	22.418	55	3.463	3.535	3.608	105	0.829	0.858	0.888
-35	142.788	148.171	153.742	6	20.756	21.123	21.494	56	3.353	3.423	3.495	106	0.808	0.837	0.866
-34	135.306	140.330	145.527	7	19.923	20.267	20.614	57	3.246	3.315	3.386	107	0.788	0.816	0.845
-33	128.266	132.958	137.807	8	19.127	19.450	19.775	58	3.143	3.211	3.280	108	0.769	0.796	0.825
-32	121.640	126.022	130.548	9	18.368	18.670	18.975	59	3.044	3.111	3.179	109	0.750	0.777	0.805
-31	115.400	119.494	123.720	10	17.643	17.926	18.211	60	2.949	3.014	3.081	110	0.731	0.758	0.786
-30	109.522	113.347	117.294	11	16.949	17.214	17.481	61	2.858	2.922	2.988	111	0.714	0.740	0.767
-29	103.989	107.565	111.252	12	16.287	16.534	16.784	62	2.770	2.834	2.898	112	0.696	0.722	0.749
-28	98.773	102.116	105.561	13	15.654	15.886	16.119	63	2.686	2.748	2.812	113	0.679	0.705	0.731
-27	93.851	96.978	100.198	14	15.049	15.266	15.484	64	2.604	2.666	2.728	114	0.663	0.688	0.714
-26	89.207	92.132	95.142	15	14.471	14.674	14.877	65	2.526	2.586	2.648	115	0.647	0.672	0.697
-25	84.823	87.559	90.374	16	13.918	14.108	14.298	66	2.450	2.509	2.570	116	0.632	0.656	0.681
-24	80.682	83.242	85.876	17	13.390	13.566	13.744	67	2.377	2.435	2.495	117	0.617	0.640	0.665
-23	76.770	79.166	81.630	18	12.884	13.049	13.215	68	2.306	2.364	2.422	118	0.602	0.625	0.649
-22	73.072	75.316	77.620	19	12.400	12.554	12.708	69	2.238	2.294	2.352	119	0.588	0.611	0.634
-21	69.576	71.677	73.834	20	11.937	12.081	12.224	70	2.172	2.228	2.284	120	0.574	0.596	0.620
-20	66.269	68.237	70.255	21	11.495	11.628	11.762	71	2.109	2.163	2.218	121	0.561	0.583	0.605
-19	63.148	64.991	66.881	22	11.070	11.195	11.320	72	2.047	2.100	2.155	122	0.548	0.569	0.592
-18	60.192	61.919	63.689	23	10.664	10.780	10.896	73	1.987	2.040	2.093	123	0.535	0.556	0.578
-17	57.393	59.011	60.669	24	10.274	10.382	10.489	74	1.930	1.981	2.034	124	0.523	0.544	0.565
-16	54.742	56.258	57.811	25	9.900	10.000	10.100	75	1.874	1.925	1.976	125	0.511	0.531	0.552
-15	52.228	53.650	55.104	26	9.534	9.634	9.734	76	1.820	1.870	1.921	126	0.499	0.519	0.540
-14	49.846	51.178	52.541	27	9.184	9.284	9.383	77	1.768	1.817	1.867	127	0.488	0.507	0.528
-13	47.586	48.835	50.112	28	8.848	8.947	9.047	78	1.718	1.766	1.815	128	0.477	0.496	0.516
-12	45.442	46.613	47.810	29	8.525	8.624	8.723	79	1.670	1.716	1.764	129	0.466	0.485	0.505
-11	43.408	44.506	45.627	30	8.216	8.315	8.413	80	1.623	1.669	1.716	130	0.455	0.474	0.494
-10	41.477	42.506	43.557	31	7.920	8.018	8.116	81	1.577	1.622	1.669	131	0.445	0.464	0.483
-9	39.635	40.600	41.584	32	7.637	7.734	7.831	82	1.533	1.578	1.623	132	0.435	0.454	0.472
-8	37.886	38.791	39.713	33	7.365	7.461	7.558	83	1.491	1.535	1.579	133	0.426	0.444	0.462
-7	36.224	37.073	37.937	34	7.104	7.199	7.295	84	1.450	1.493	1.537	134	0.416	0.434	0.452
-6	34.646	35.442	36.252	35	6.853	6.948	7.043	85	1.410	1.452	1.495	135	0.407	0.424	0.442
-5	33.146	33.892	34.652	36	6.613	6.707	6.801	86	1.372	1.413	1.455	136	0.398	0.415	0.433
-4	31.720	32.420	33.131	37	6.383	6.475	6.568	87	1.334	1.375	1.417	137	0.389	0.406	0.424
-3	30.364	31.020	31.687	38	6.161	6.253	6.345	88	1.298	1.338	1.379	138	0.381	0.397	0.415
-2	29.074	29.689	30.314	39	5.949	6.039	6.130	89	1.264	1.303	1.343	139	0.373	0.389	0.406
-1	27.847	28.423	29.009	40	5.744	5.834	5.924	90	1.230	1.268	1.307	140	0.365	0.381	0.397
0	26.678	27.219	27.768	41	5.547	5.636	5.725	91	1.197	1.234	1.273	141	0.357	0.373	0.389
				42	5.358	5.445	5.533	92	1.165	1.202	1.240	142	0.349	0.365	0.381
				43	5.176	5.262	5.349	93	1.134	1.170	1.207	143	0.342	0.357	0.373
				44	5.002	5.086	5.172	94	1.104	1.139	1.176	144	0.335	0.350	0.365
				45	4.833	4.917	5.002	95	1.075	1.110	1.146	145	0.328	0.342	0.358
				46	4.672	4.754	4.837	96	1.046	1.081	1.116	146	0.321	0.335	0.350
				47	4.516	4.597	4.679	97	1.019	1.053	1.088	147	0.314	0.328	0.343
				48	4.366	4.446	4.527	98	0.993	1.026	1.060	148	0.308	0.322	0.336
				49	4.222	4.301	4.381	99	0.967	0.999	1.033	149	0.301	0.315	0.329
				50	4.083	4.161	4.240	100	0.942	0.974	1.007	150	0.295	0.309	0.323

The information contained in this document is the exclusive property of HannStar Display Corporation. It shall not be disclosed, distributed or reproduced in whole or in part without written permission of HannStar Display Corporation.

6.0 ELECTRICAL CHARACTERISTICS

6.1 TFT LCD Module

Item	Symbol	Min.	Typ.	Max.	Unit	Note
Supply Voltage	VCC	3	3.3	3.6	V	
Input signal voltage	ViH	VCC*0.7	-	VCC	V	
	ViL	0	-	VCC*0.3	V	
Current of power supply	I_{DD}	(--)	(--)	400	mA	VCC =3.3V White pattern
Inrush current	I_{RUSH}	(--)	(--)	2.0	A	Note*

Note* : Inrush current test circuit and rising time setting (power on)

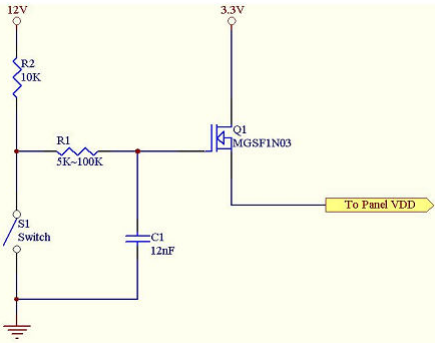

Test circuit

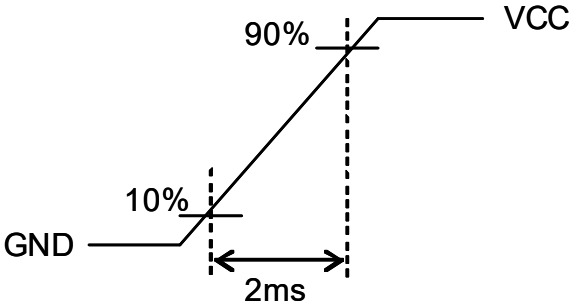

Rising time

6.2 Switching Characteristics for LVDS Receiver

Item	Symbol	Min.	Typ.	Max.	Unit	Conditions
Differential Input High Threshold	Vth		—	100	mV	V_{CM}=1.2V
Differential Input Low Threshold	Vtl	-100	—		mV	
Input Current	I_{IN}	-10	—	+10	uA	
Differential input Voltage	$\|V_{ID}\|$	0.1	—	0.6	V	
Common Mode Voltage Offset	V_{CM}	1	1.2	1.7-($\|V_{ID}\|$/2)	V	

The information contained in this document is the exclusive property of HannStar Display Corporation. It shall not be disclosed, distributed or reproduced in whole or in part without written permission of HannStar Display Corporation.

6.3 Bit LVDS input

6.3.1 8Bit LVDS input

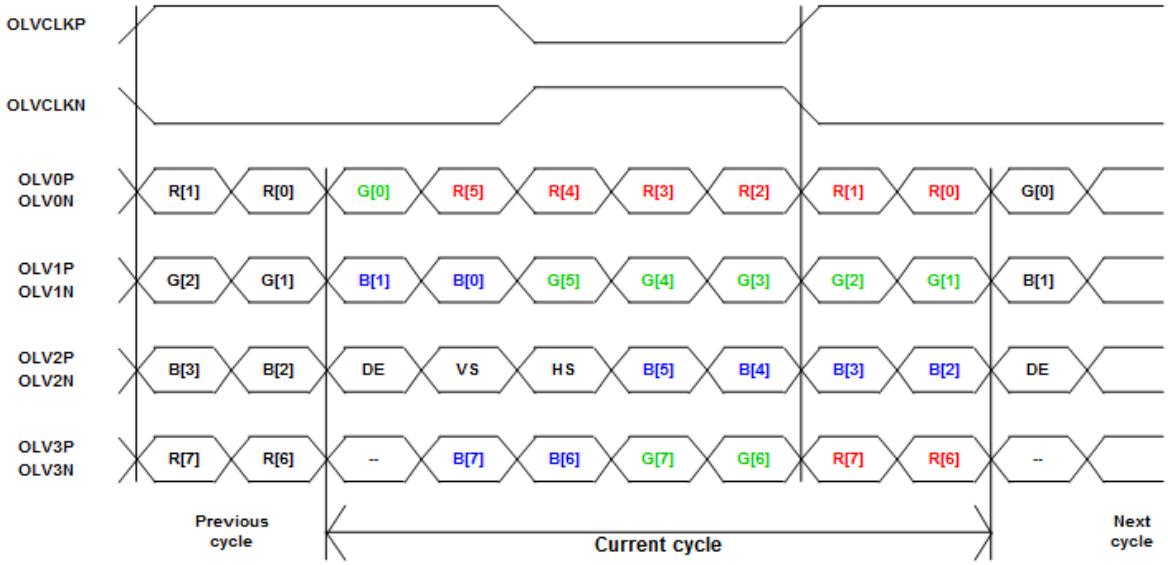

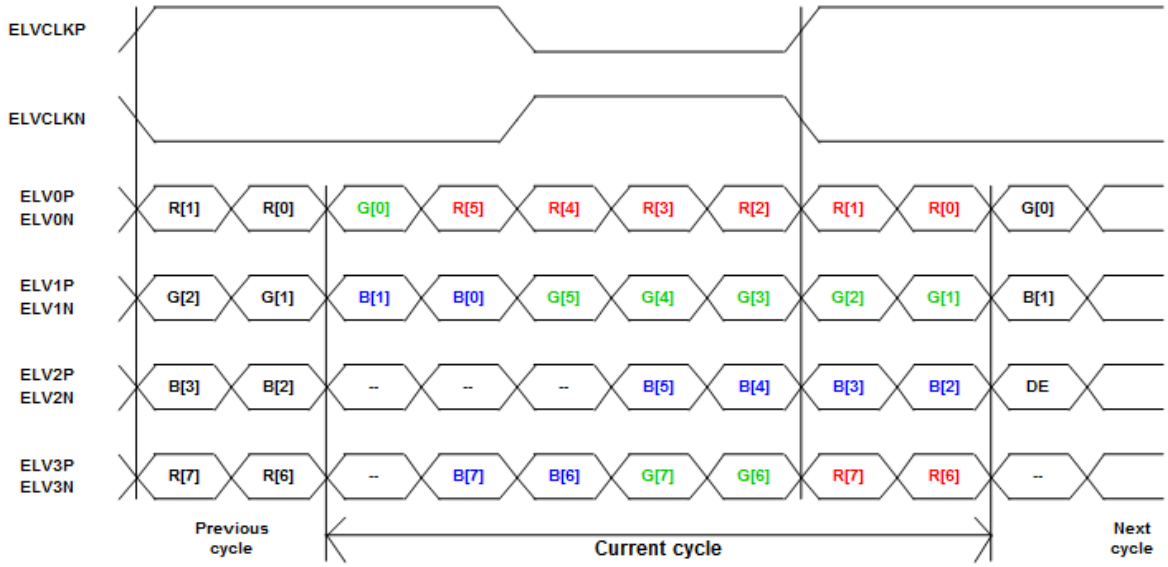

The information contained in this document is the exclusive property of HannStar Display Corporation. It shall not be disclosed, distributed or reproduced in whole or in part without written permission of HannStar Display Corporation.

6.4 Interface Timing (DE mode)

Interface Timing (DE mode) Two Port LVDS Timing.(1920xRGBx720)					
Item	Symbol	**Min.**	**Typ.**	**Max.**	Unit
Frame Rate	FR	**55**	**60**	**65**	Hz
Vertical Display Time	T_{vd}		**720**		H
Vertical pulse width	T_{vpw}	**(2)**	**(3)**	**(16)**	H
Vertical back porch	T_{vbp}	**(3)**	**(21)**	**(100)**	H
Vertical front porch	T_{vfp}	**(5)**	**(8)**	**(100)**	H
Frame Period	T_v	**(730)**	**(752)**	**(936)**	H
Horizontal Display Time	T_{hd}		**960**		DCLK
Horizontal pulse width	T_{hpw}	**(10)**	**(12)**	**(96)**	DCLK
Horizontal back porch	T_{hbp}	**(5)**	**(16)**	**(96)**	DCLK
Horizontal front porch	T_{hfp}	**(24)**	**(26)**	**(96)**	DCLK
1 Horizontal line	T_v	**(999)**	**(1014)**	**(1248)**	DCLK
Clock Rate	F_{DCLK}	**(43.1)**	**(45.8)**	**(61.7)**	MHz

Timing Diagram of Interface Signal (DE mode)

(1) Horizontal input timing

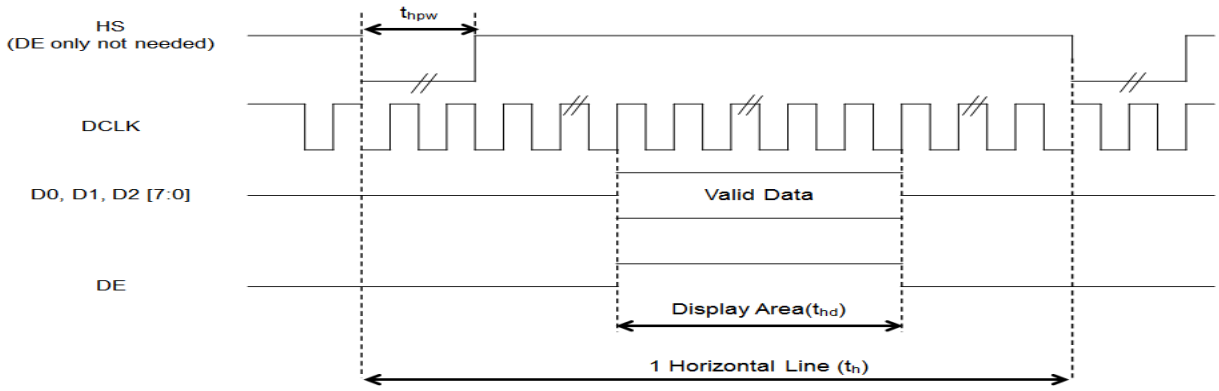

(2) Vertical input timing

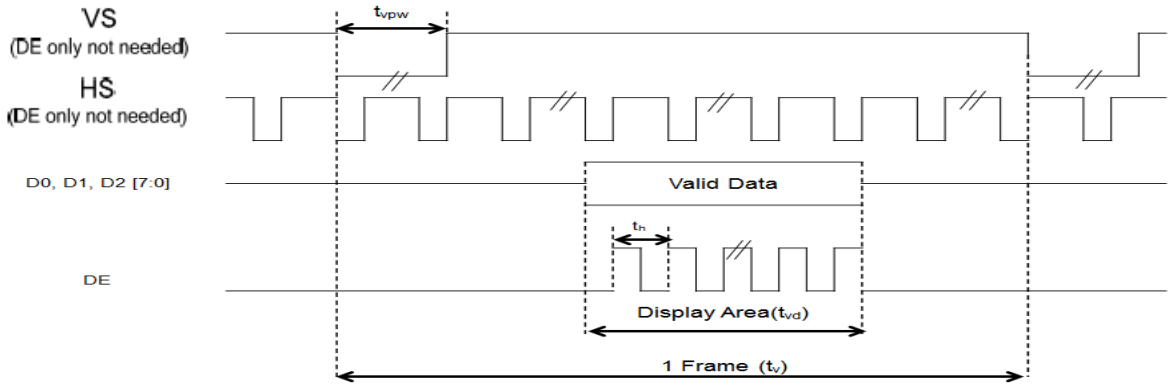

The information contained in this document is the exclusive property of HannStar Display Corporation. It shall not be disclosed, distributed or reproduced in whole or in part without written permission of HannStar Display Corporation.

6.5 Power On / Off Sequence

Power on Sequence

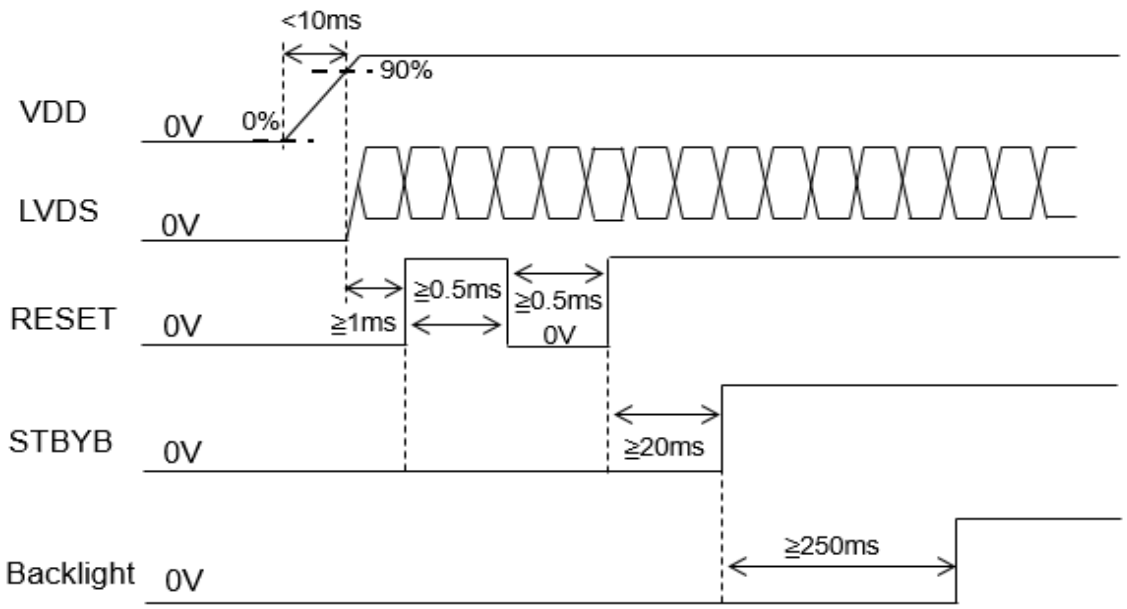

Power off Sequence

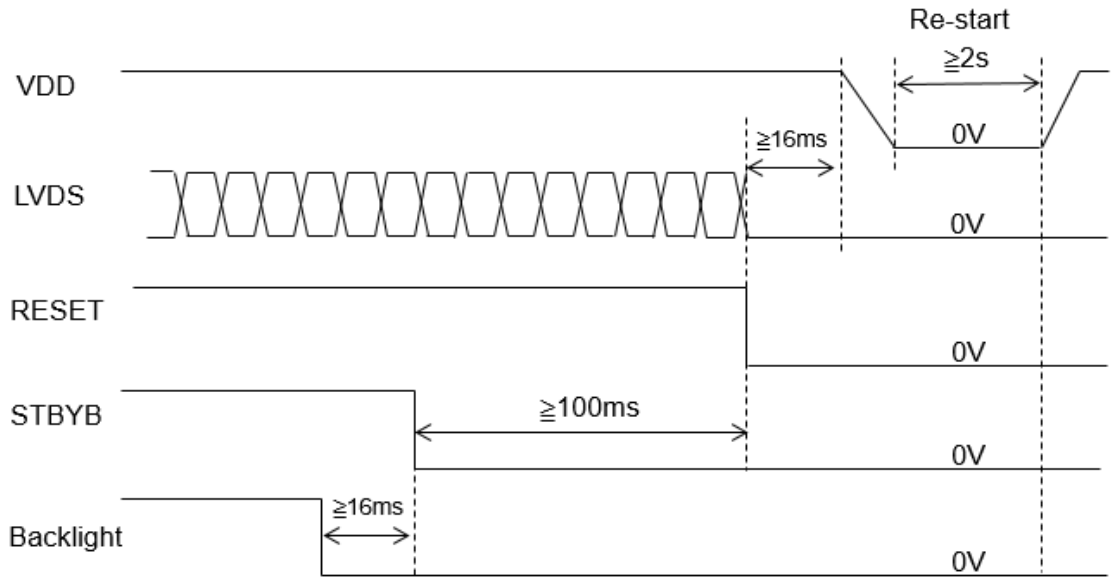

The information contained in this document is the exclusive property of HannStar Display Corporation. It shall not be disclosed, distributed or reproduced in whole or in part without written permission of HannStar Display Corporation.

6.6 Backlight Unit

Parameter	Symbol	Min	Typ	Max	Units	Condition
LED Current	I_F	(--)	(320)	(--)	mA	Ta=25℃
LED Voltage	V_F	(--)	(--)	(37.4)	Volt	Ta=25℃
LED Life-Time	N/A	50,000	--	--	Hour	Ta=25℃ I_F=(80)mA Note (2)

Note (1) LED life time (Hr) can be defined as the time in which it continues to operate under the condition: Ta=25±3 ℃, typical IL value indicated in the above table until the brightness becomes less than 50%.

Note (2) The "LED life time" is defined as the module brightness decrease to 50% original brightness at Ta=25℃ and IL= (320) mA. The LED lifetime could be decreased if operating IL is larger than 300 mA. The constant current driving method is suggested.

Note (3) LED Light Bar Circuit 11S4P =44pcs LED

Note (4) LED temperature current curve, The temperature at 70 degrees before the output Duty 100%,70 degrees to 85 degrees when the linear drop to Duty 40%.

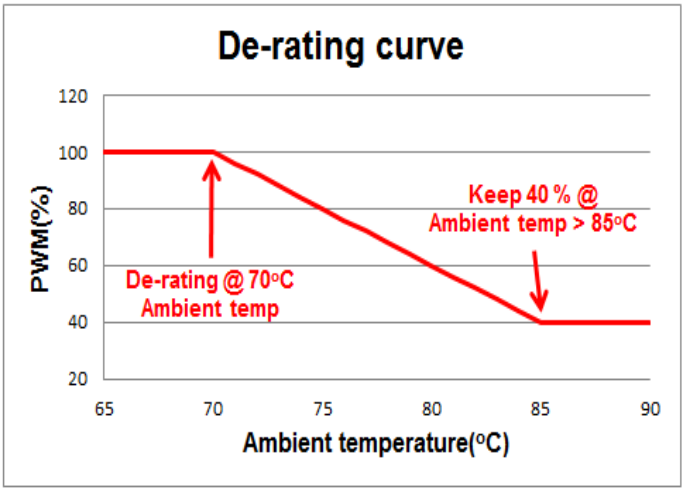

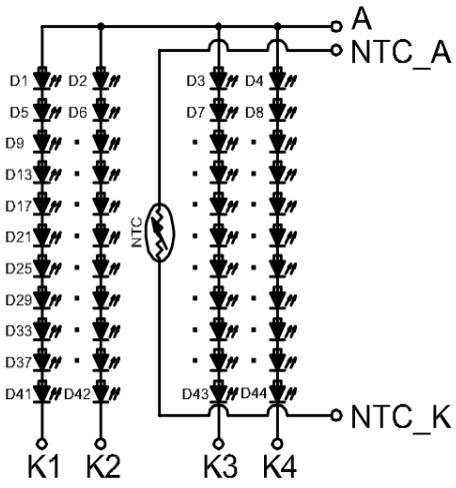

The information contained in this document is the exclusive property of HannStar Display Corporation. It shall not be disclosed, distributed or reproduced in whole or in part without written permission of HannStar Display Corporation.

7.0 RELIABILITY TEST ITEMS

No.	Item	Conditions	Remark
1	High Temperature Storage	Ta=+90°C, 500hrs	1, 2, 3
2	Low Temperature Storage	Ta=-40°C, 500hrs	1, 2, 3
3	High Temperature Operation	Ta=+85°C, 500hrs	1, 2, 3
4	Low Temperature Operation	Ta=-30°C, 500hrs	1, 2, 3,
5	High Temperature and High Humidity (operation)	Ta=+65°C, 90%RH, 240hrs	1, 2, 3
6	Thermal Cycling Test (non operation)	-30°C(30min)→+80°C(30min),100 cycles	1, 2, 3
7	Electrostatic Discharge	Contact = ± 8 kV, class B; (R=330Ω,C=150pF)； Air = ± 15 kV, class B (R=330Ω,C=150pF)； 1 time for each point.	
8	Vibration	1.Random: 1.04G, 10~500Hz, XYZ, 30min/each direction 2.Sine: Freq.1.5G, 8~33.3Hz, Stoke: 1.3mmhz Sweep: 2.9G, 33.3~400 X/Z: 2hrs, Y:4hrs	
9	Shock	Half-Sine, 100G, 6ms, ±XYZ, 1time	
10	Vibration (with carton)	Random: 0.015G^2/Hz, 5~200Hz -6dB/Octave, 200~400Hz XYZ 各方向 2hrs	
11	Drop (with carton)	Drop height condition, basis on the product weight and Follow QB200-0015 1 corner, 3 edges, 6 surfaces	

Note1: There is no display function NG issue occurred, all the cosmetic specification is judged before the reliability stress.

Note2: The test result shall be evaluated after the sample has been left at room temperature and humidity for 2 hours without load. No condensation shall be accepted. The sample shall be free from defects:
(Air bubble in the LCD、Seal leak、Non-display、Missing segments、Glass crack).

Note3: The test condition definition panel's surface temperature.

The information contained in this document is the exclusive property of HannStar Display Corporation. It shall not be disclosed, distributed or reproduced in whole or in part without written permission of HannStar Display Corporation.

8.0 OUTLINE DIMENSION

Unit : mm

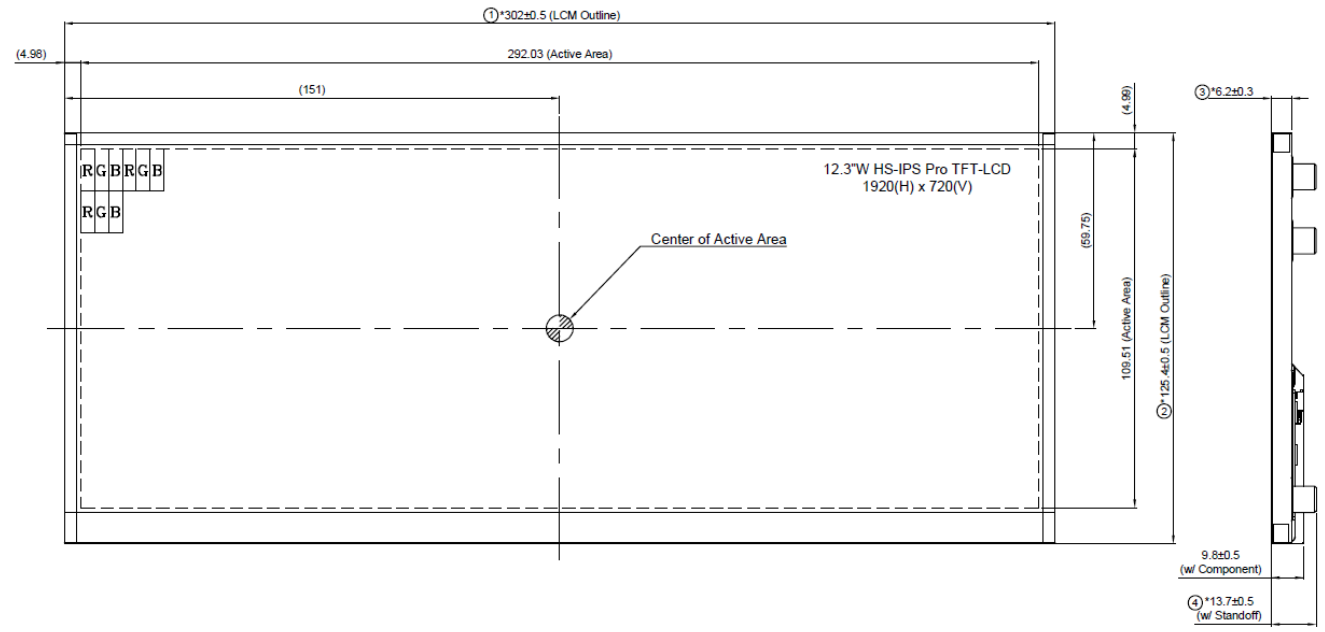

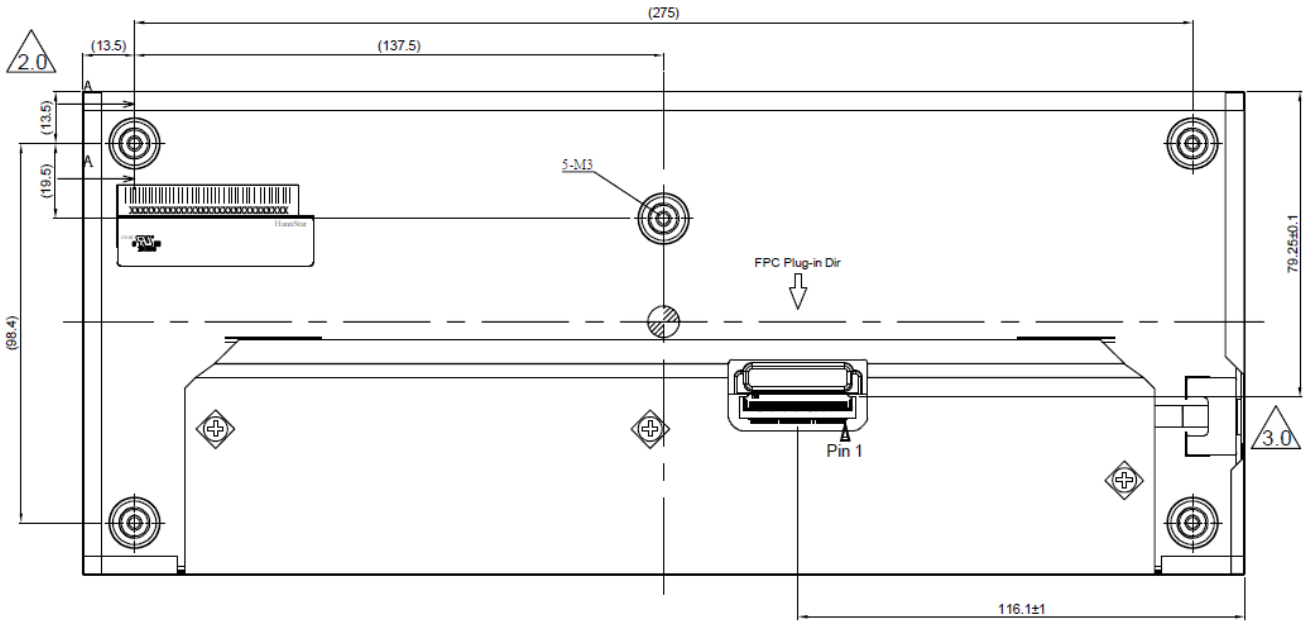

Note: General tolerance: +/- 0.2mm

The information contained in this document is the exclusive property of HannStar Display Corporation. It shall not be disclosed, distributed or reproduced in whole or in part without written permission of HannStar Display Corporation.

9.0 LOT MARK

9.1 Lot Mark

1	2	3	4	5	6	7	8	9	10	11	12	13	14	15

Code 1,2,3,4,5,6: HannStar internal flow control code.
Code 7: production location.
Code 8: production year.
Code 9: production month.
Code 10,11,12,13,14,15: serial number.

Note (1) Production Year: Code 8 is defined by the last number of the year, for example

Year	2016	2017	2018	2019	2020	2021	2022	2023	2024	2025
Mark	6	7	8	9	0	1	2	3	4	5

Note (2) Production Month

Month	Jan.	Feb.	Mar.	Apr.	May.	Jun.	Jul.	Aug.	Sep.	Oct	Nov.	Dec.
Mark	1	2	3	4	5	6	7	8	9	A	B	C

9.2 Detail of Lot Mark

(1) Below label is attached on the backside of the LCD module. See Section 8.0: Outline Dimension.
(2) The detail of Lot Mark is attached as below.
(3) This is subject to change without prior notice.

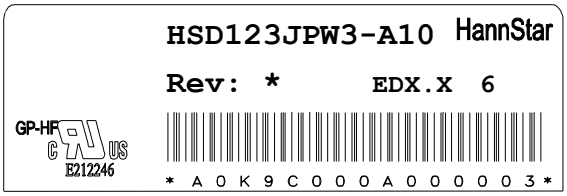

The information contained in this document is the exclusive property of HannStar Display Corporation. It shall not be disclosed, distributed or reproduced in whole or in part without written permission of HannStar Display Corporation.

10.0 PACKAGE SPECIFICATION

10.1 Packing form

IItem	Q'ty	Material	Size
①	2	EPE Board (T/B)	445 x 385 x 20mm
②	2	EPE Board (L/R)	340 x 200 x 20mm
③	2	EPE Board (F/RE)	445 x 200 x 20mm
④	1	Corrugated Paperboard (AB Flute)	455 x 395 x 260mm
⑤	9	PET Tray	400 x 340 x 26.2mm

(1) Package quantity in one carton: 16 pieces.

10.2 Packing assembly drawings

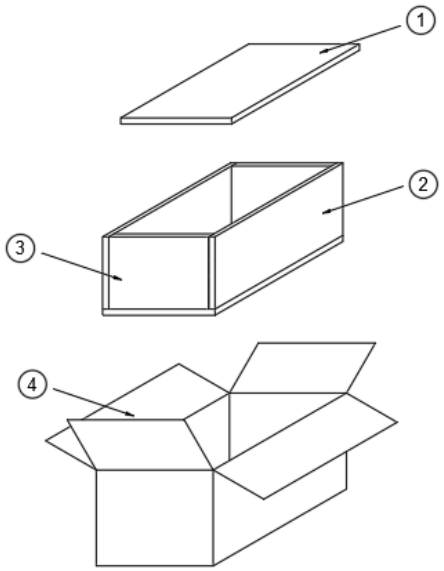

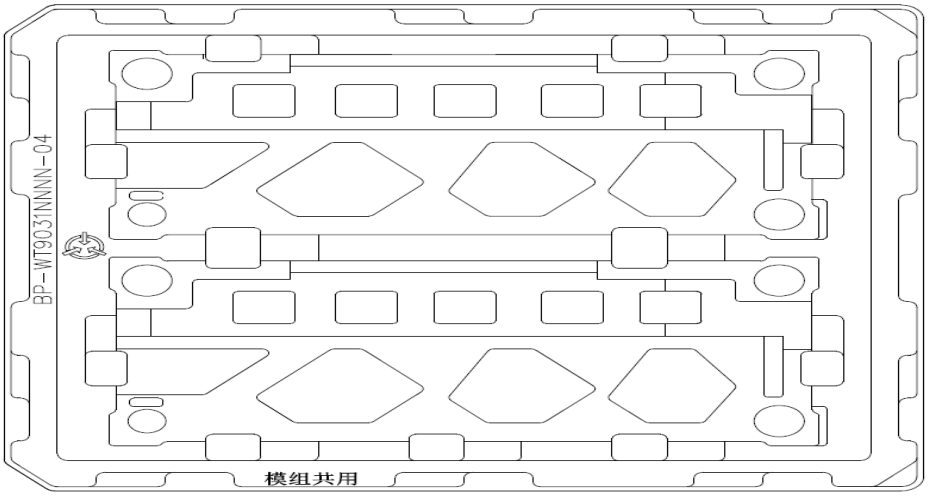

The information contained in this document is the exclusive property of HannStar Display Corporation. It shall not be disclosed, distributed or reproduced in whole or in part without written permission of HannStar Display Corporation.

10.3 Packing assembly drawings

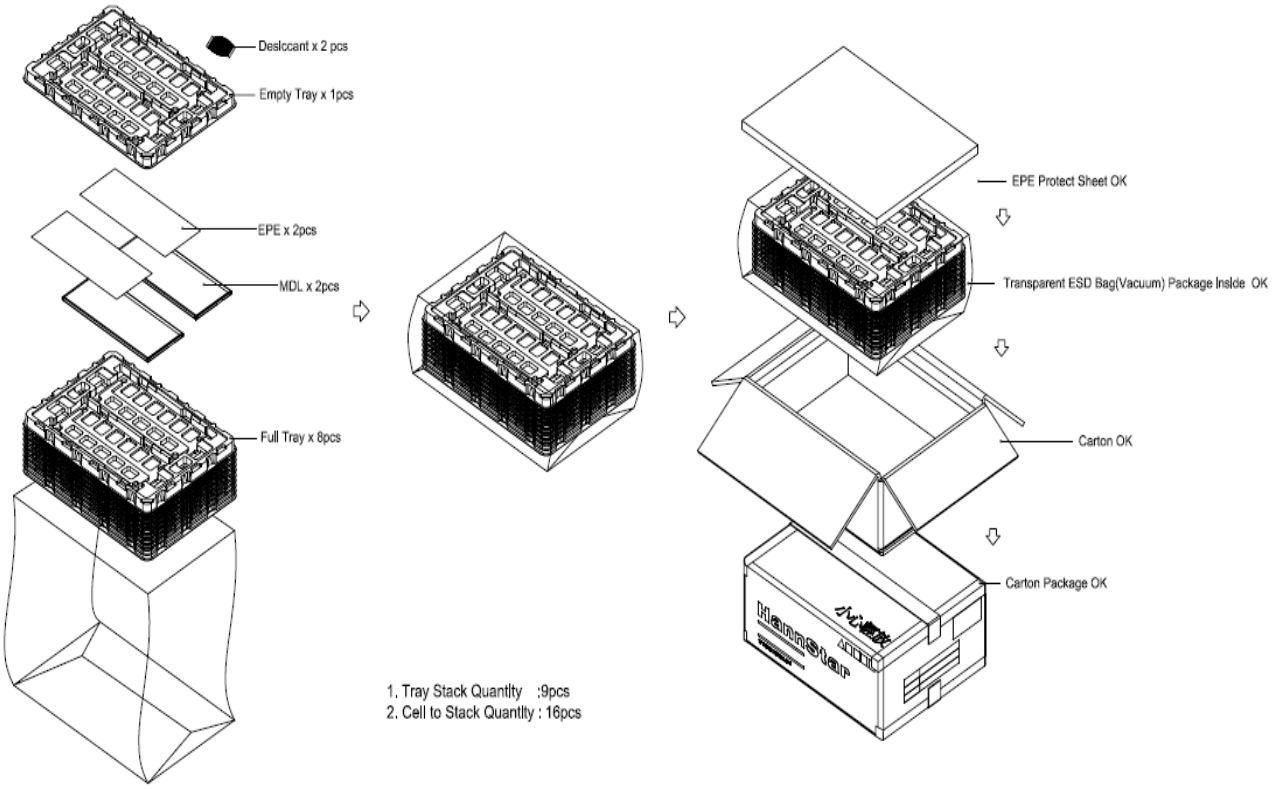

The information contained in this document is the exclusive property of HannStar Display Corporation. It shall not be disclosed, distributed or reproduced in whole or in part without written permission of HannStar Display Corporation.

10.4 Packing assembly drawings

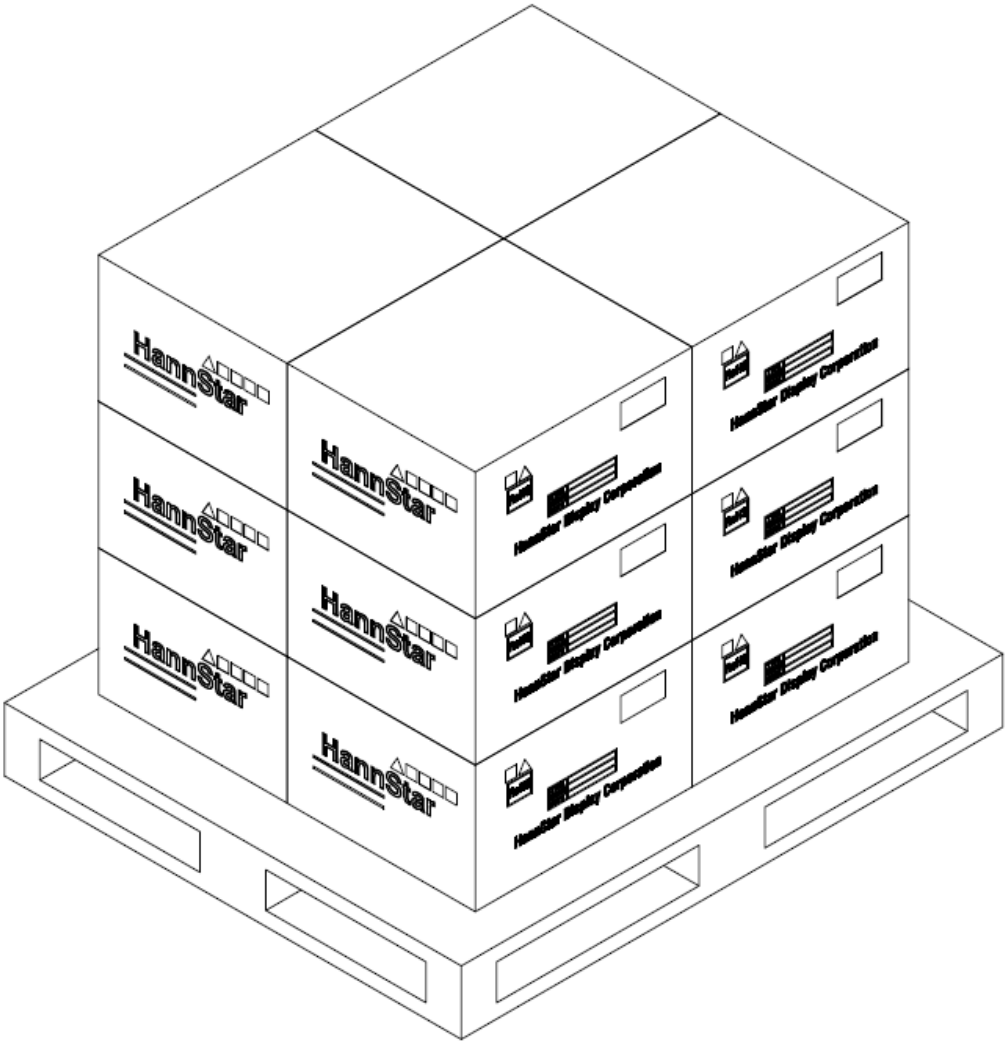

The information contained in this document is the exclusive property of HannStar Display Corporation. It shall not be disclosed, distributed or reproduced in whole or in part without written permission of HannStar Display Corporation.

11.0 GENERAL PRECAUTION

11.1 Use Restriction

This product is not authorized for use in life supporting systems, aircraft navigation control systems, military systems and any other application where performance failure could be life-threatening or otherwise catastrophic.

11.2 Disassembling or Modification

Do not disassemble or modify the module. It may damage sensitive parts inside LCD module, and may cause scratches or dust on the display. HannStar does not warrant the module, if customers disassemble or modify the module.

11.3 Breakage of LCD Panel

11.3.1.If LCD panel is broken and liquid crystal spills out, do not ingest or inhale liquid crystal, and do not contact liquid crystal with skin.

11.3.2. If liquid crystal contacts mouth or eyes, rinse out with water immediately.

11.3.3. If liquid crystal contacts skin or cloths, wash it off immediately with alcohol and rinse thoroughly with water.

11.3.4. Handle carefully with chips of glass that may cause injury, when the glass is broken.

11.4 Electric Shock

11.4.1. Disconnect power supply before handling LCD module.

11.4.2. Do not pull or fold the LED cable.

11.4.3. Do not touch the parts inside LCD modules and the fluorescent LED's connector or cables in order to prevent electric shock.

11.5 Absolute Maximum Ratings and Power Protection Circuit

11.5.1. Do not exceed the absolute maximum rating values, such as the supply voltage variation, input voltage variation, variation in parts' parameters, environmental temperature, etc., otherwise LCD module may be damaged.

11.5.2. Please do not leave LCD module in the environment of high humidity and high temperature for a long time.

11.5.3. It's recommended to employ protection circuit for power supply.

11.6 Operation

11.6.1 Do not touch, push or rub the polarizer with anything harder than HB pencil lead.

11.6.2 Use fingerstalls of soft gloves in order to keep clean display quality, when persons handle the LCD module for incoming inspection or assembly.

11.6.3 When the surface is dusty, please wipe gently with absorbent cotton or other soft material.

The information contained in this document is the exclusive property of HannStar Display Corporation. It shall not be disclosed, distributed or reproduced in whole or in part without written permission of HannStar Display Corporation.

11.6.4 Wipe off saliva or water drops as soon as possible. If saliva or water drops contact with polarizer for a long time, they may causes deformation or color fading.

11.6.5 When cleaning the adhesives, please use absorbent cotton wetted with a little petroleum benzine or other adequate solvent.

11.7 Mechanism

Please mount LCD module by using mounting holes arranged in four corners tightly.

11.8 Static Electricity

11.8.1 Protection film must remove very slowly from the surface of LCD module to prevent from electrostatic occurrence.

11.8.2 Because LCD module use CMOS-IC on circuit board and TFT-LCD panel, it is very weak to electrostatic discharge. Please be careful with electrostatic discharge. Persons who handle the module should be grounded through adequate methods.

11.9 Strong Light Exposure

The module shall not be exposed under strong light such as direct sunlight. Otherwise, display characteristics may be changed.

11.10 Disposal

When disposing LCD module, obey the local environmental regulations.

The information contained in this document is the exclusive property of HannStar Display Corporation. It shall not be disclosed, distributed or reproduced in whole or in part without written permission of HannStar Display Corporation.

DATA MODUL

Passion Displayed

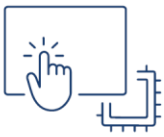

All good things come in threes:

With **Hardware**, **Software** and **Services**, we realise unique display solutions that turn your ideas into reality.

www.data-modul.com